P-51B/C Mustang Birdcage canopy

eduard

1/32 Scale Plastic Model Kit

item No. 932012



Produced under license

Boeing, P-51 Mustang, their distinctive logos, product markings and trade dress are trademarks of The Boeing Company.

EDUARD BRASSIN HYBRID

The P-51 Mustang is one of the best fighters of all time and although an American airplane, its genesis owes a lot to Great Britain. The main change in the development of the type occured when the original Allison engine was replaced by the R&R Merlin one. The new unit literally unlocked the whole potential of the already excellent airframe as the P-51B/C version was born.

It started in 1940, when British Buying Committee asked North American Aviation (NAA) to build the Curtiss P-40s for the RAF. NAA president James Kindelberger offered Britons the development of a much better plane instead. The Committee agreed and so the design team led by chief designer Edward Schmued, who was a German immigrant with Austrian roots, started to work. The preliminary design was approved on May 4, 1940, final assembly and installation of the engine began on September 9 (just 127 days after approval). The very first flight of the NA-73X prototype followed on October 26.

Innovative fighter

The Allison V-1710-39 one-stage, one-speed supercharged liquid-cooled in-line engine rated at 1,100 HP was chosen for the new fighter and the designers creating as narrow and sleek a fuselage as possible did their best to lower the drag. For the same reason they decided to use an innovative laminar flow airfoil, which lowers the drag indeed, but, on the other hand, requires a smooth surface to work well. That necessitated putty and sand the leading area of the wing. Another innovative design feature was the radiator belly under the fuselage which even developed some additional thrust thanks to the Meredith effect.
Armament consisted of two guns in the nose and four in the wings, all of them .50 caliber Brownings (the Mk. Ia variant had four 20mm cannons). Britons chose the name Mustang for the new aircraft, later adopted by USAAF as well. The RAF received the first Mustangs Mk.I in October 1941. The performance was found satisfactory, as the Mustang was faster than the Spitfire Mk.V and had more than double the range. On the other side, the Allison engine reached its maximum power at only 11,800 ft (3,597 m) because of its one stage supercharger. Above this level the engine performance decreased rapidly. As the aerial combats occurred much higher, the RAF decided to use their Mustangs in the reconnaissance role and the US Army Air Corps, interested in the new type as well (but bound to the contract to buy P-40, P-39 and P-38 pursuits), asked the NAA to convert the Mustang as a dive bomber with wing dive brakes (the A-36 variant).

Merlin magic

To solve the high altitude weakness, the engineering began in Great Britain to fit the Mustang with the two-stage, two-speed supercharger Merlin 61 engine. The trials of the Mustang X prototype, fitted with Merlin 65 finally, found the level speed increased to 433 mph (697 km/h) at 22,000 ft (6,700 m), thus 100 mph (161 km/h) better than Mustang Mk.I. As it was obviously the way to further develop the Mustang, the NAA started its own work, using license-built Packard-Merlin engines. The need for an intercooler of the two-stage supercharger necessitated a bigger radiator duct and the intake for the carburetor moved from the top of the nose to the bottom. Another change included the removal of the fuselage guns and adding two in the wing.
The production started at the Inglewood plant as P-51B on May 1943 and at the new production line at NAA Dallas plant as P-51C in August 1943. The supplies of the new version to RAF continued as Mustang Mk. III.

Ace maker and infinite warrior

The first Mustang aerial victory was achieved on August 19, 1942, when Flight Officer Hills shot down an Fw 190. It was the beginning of the incredible tally of 4,950 enemy aircraft shot down by Mustang pilots during World War II. Of them, 251 achieved the "ace" status. The most successful pilot of P-51 was George Preddy Jr., recording 24 of his 27 aerial victories flying Mustang, followed by John C. Meyer and John J. Woll with 21 kills each. Famous Charles Yeager, the first man to break the sonic barrier in 1947, was the first pilot of P-51D to became ace in just one day, after recording five kills on October 12, 1944.

The kit: P-51B/C Mustang Birdcage canopy

The P-51B/C were great fighters but lacked backward visibility and their guns jammed far too often. The problems with visibility were down to the so called Birdcage canopy, which was aligned with the high ridge of the rear fuselage, thus preventing pilot to observe the area behind. Still, the P-51B/C was genuine long-range fighter changing the daytime bomber escorts over the occupied territory dramatically. The problem with visibility was partly solved by so called „Malcolm Hood" frameless semi--bubble canopy sliding to the rear on rails instead of opening on hinges to the right side. The canopy was not a factory solution, it was in fact invented by NAA engineers working in the UK. The other teething problem of P-51B/C, jamming of the guns, was solved a little bit later with the P-51D/K version.

ATTENTION • UPOZORNĚNÍ

Carefully read instruction sheet before assembling. When you use glue or paint, do not use near open flame and use in well ventilated room. Keep out of reach of small children. Children must not be allowed to suck any part, or pull vinyl bag over the head.

Před započetím stavby si pečlivě prostudujte stavební návod. Při používání barev a lepidel pracujte v dobře větrané místnosti. Lepidla ani barvy nepoužívejte v blízkosti otevřeného ohně. Model není určen malým dětem, mohlo by dojít k požití drobných dílů.

INSTRUCTION SIGNS • INSTR. SYMBOLY



PLEASE CHECK THE LATEST VERSION OF THE INSTRUCTION ON WWW.EDUARD.COM

PARTS • DÍLY

A>

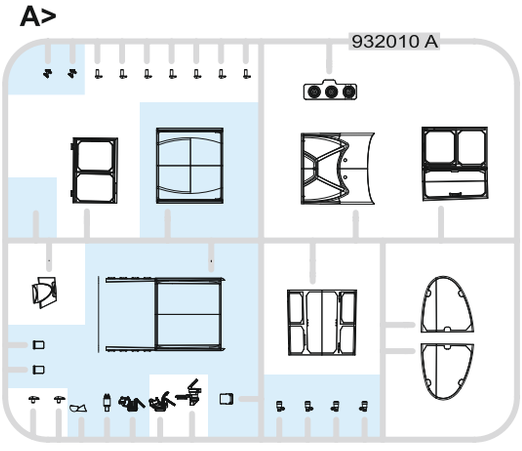

B>

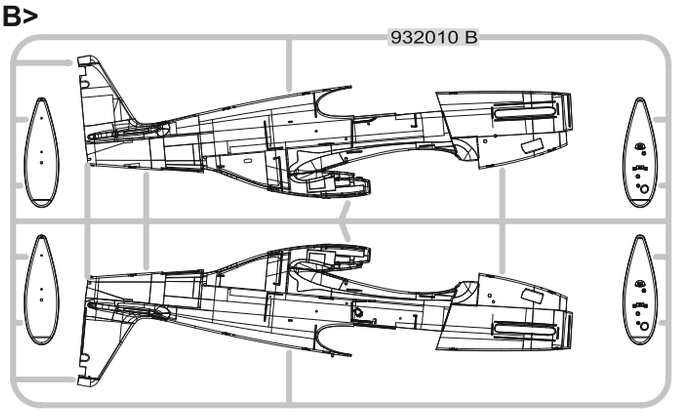

D>

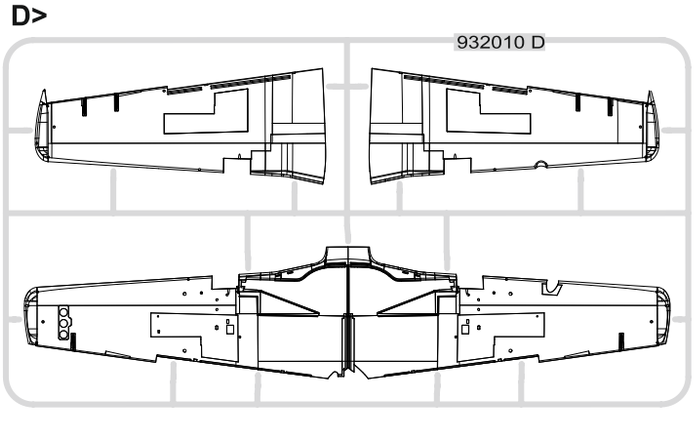

E>

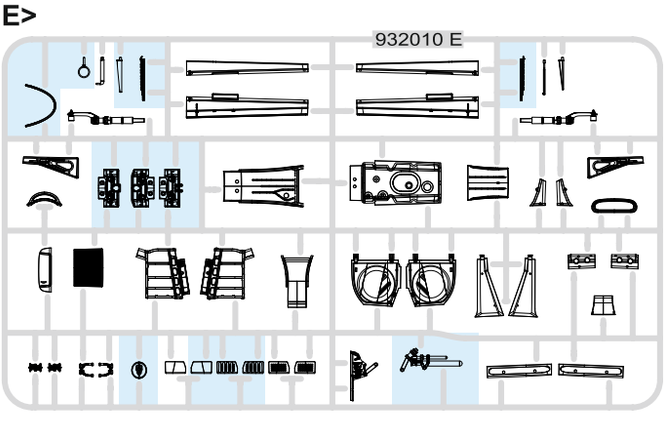

F>

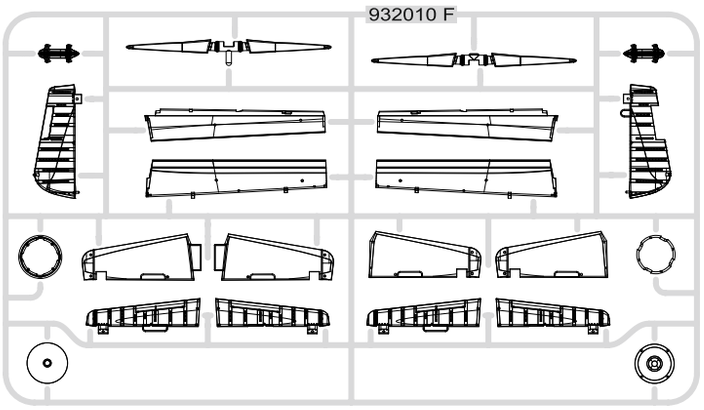

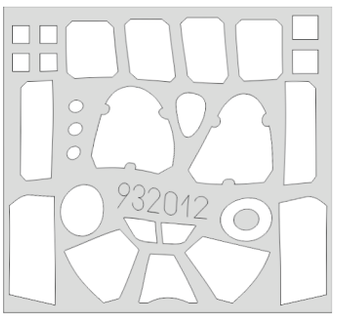

PE - PHOTO ETCHED DETAIL PARTS

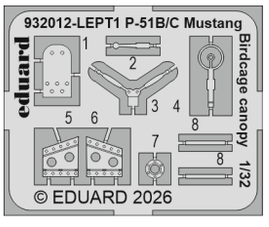

RESIN PARTS • RESINOVÉ DÍLY

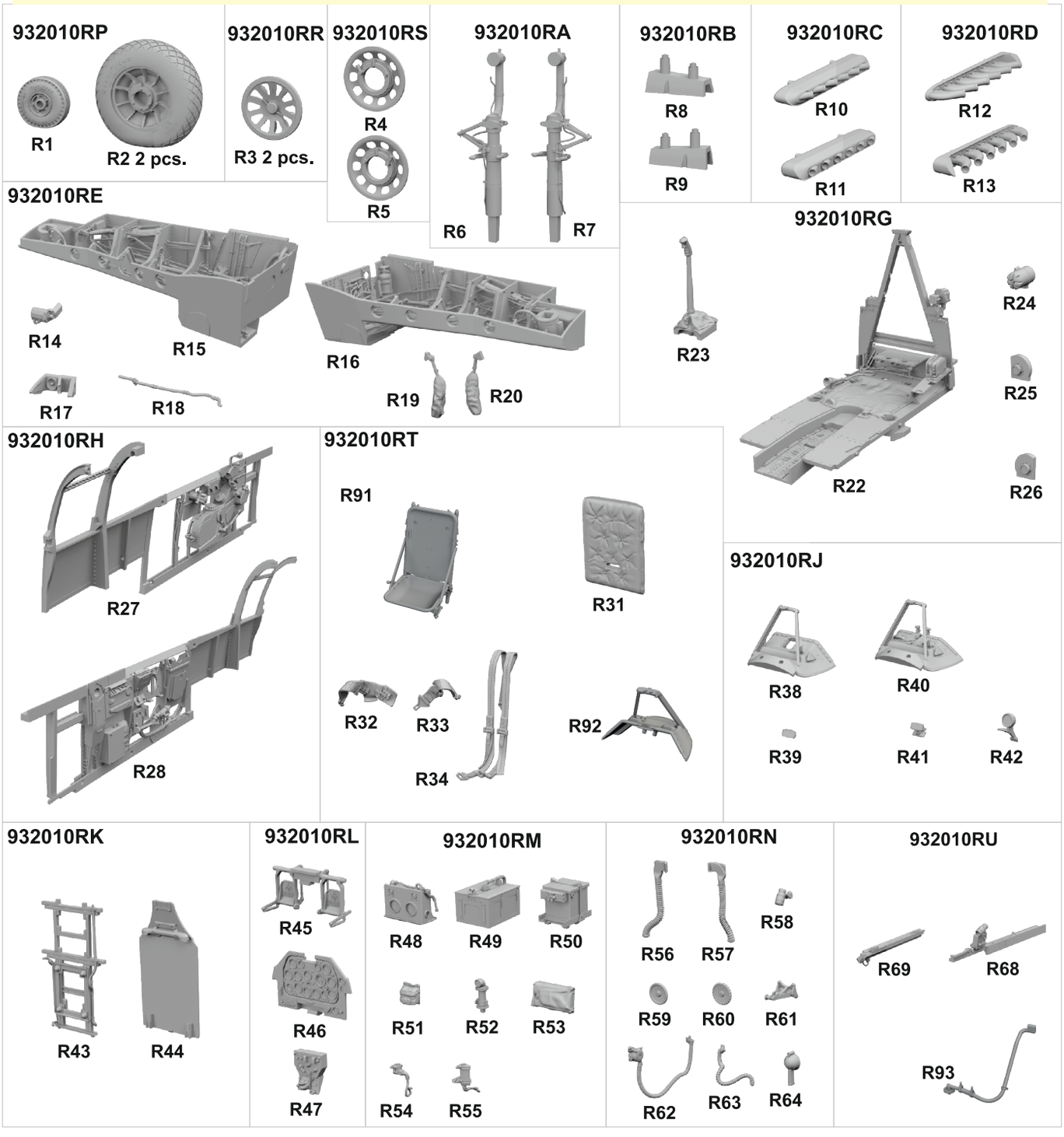

-Parts not for use. -Teile werden nicht verwendet. -Pièces à ne pas utiliser. -Tyto díly nepoužívejte při stavbě. - 使用しない部品

COLORS • BARVY

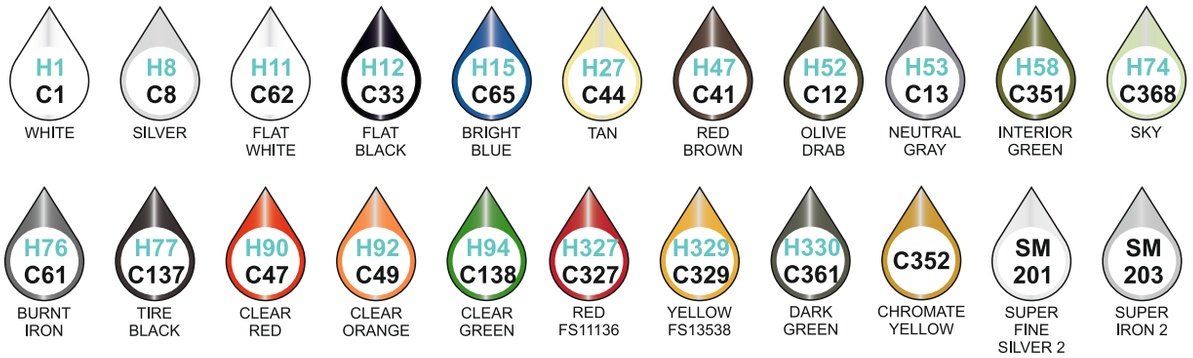

COCKPIT

Warren McArthur SK-2016 seat

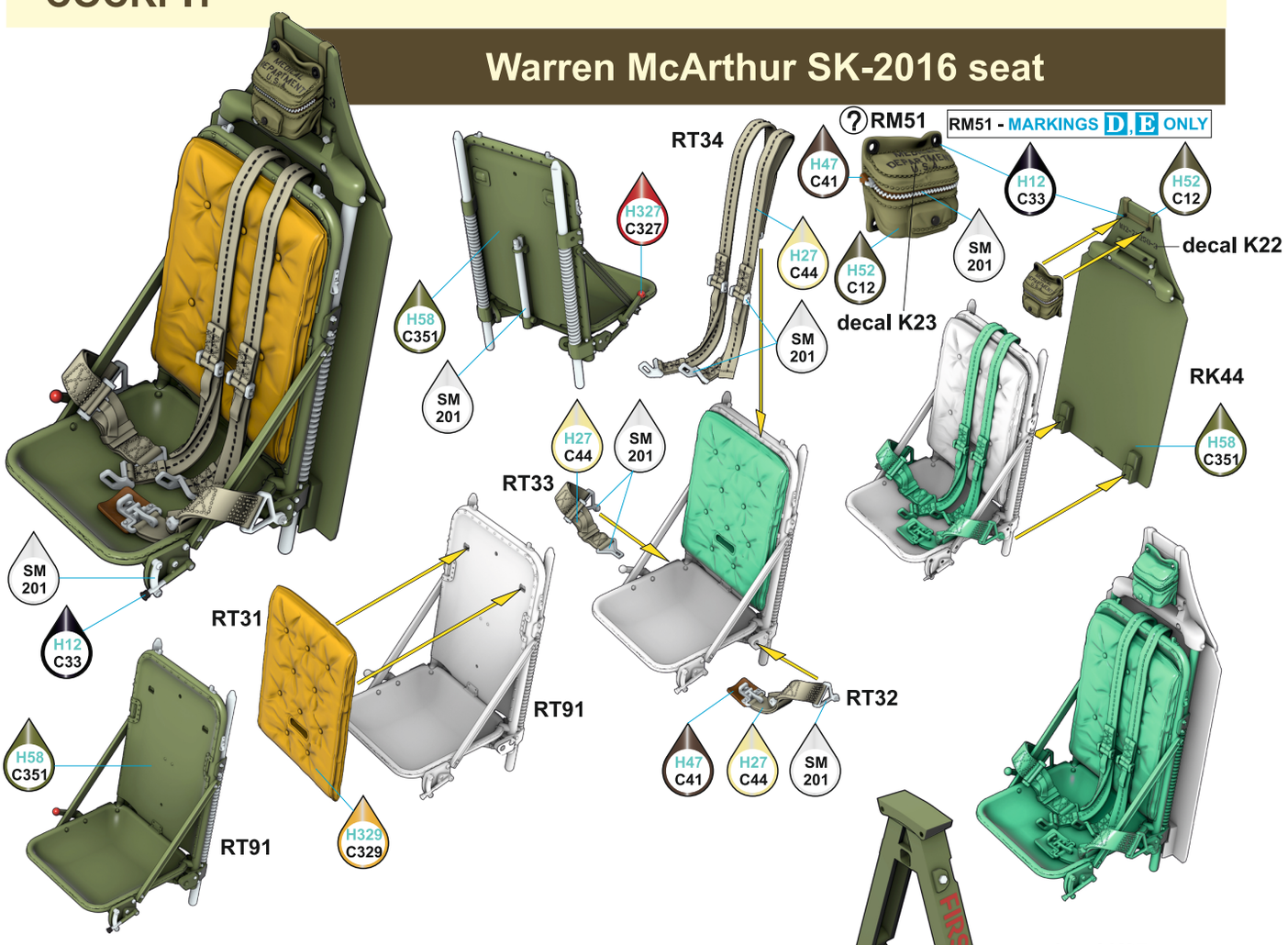

Cockpit floor

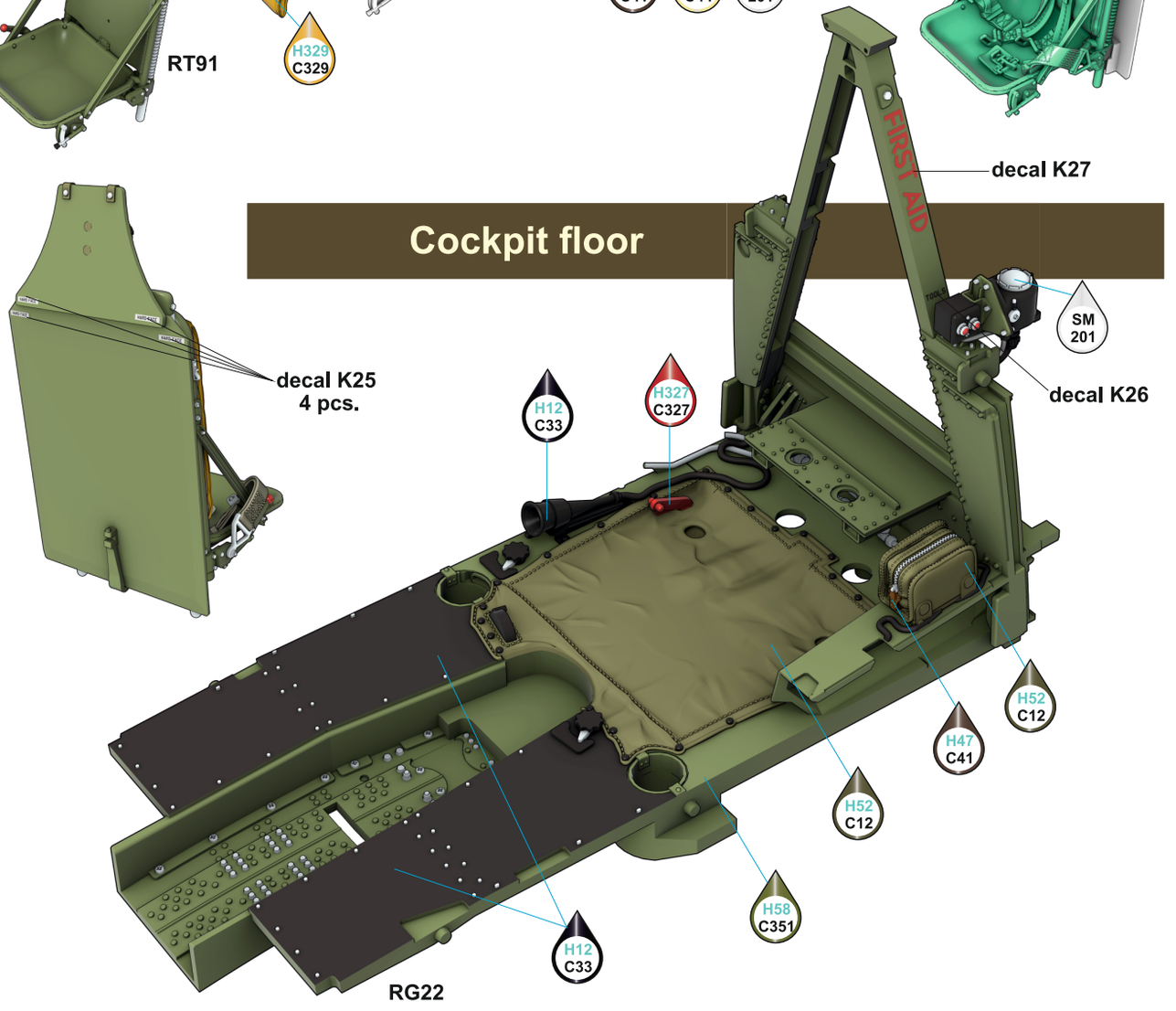

COCKPIT

Cockpit floor

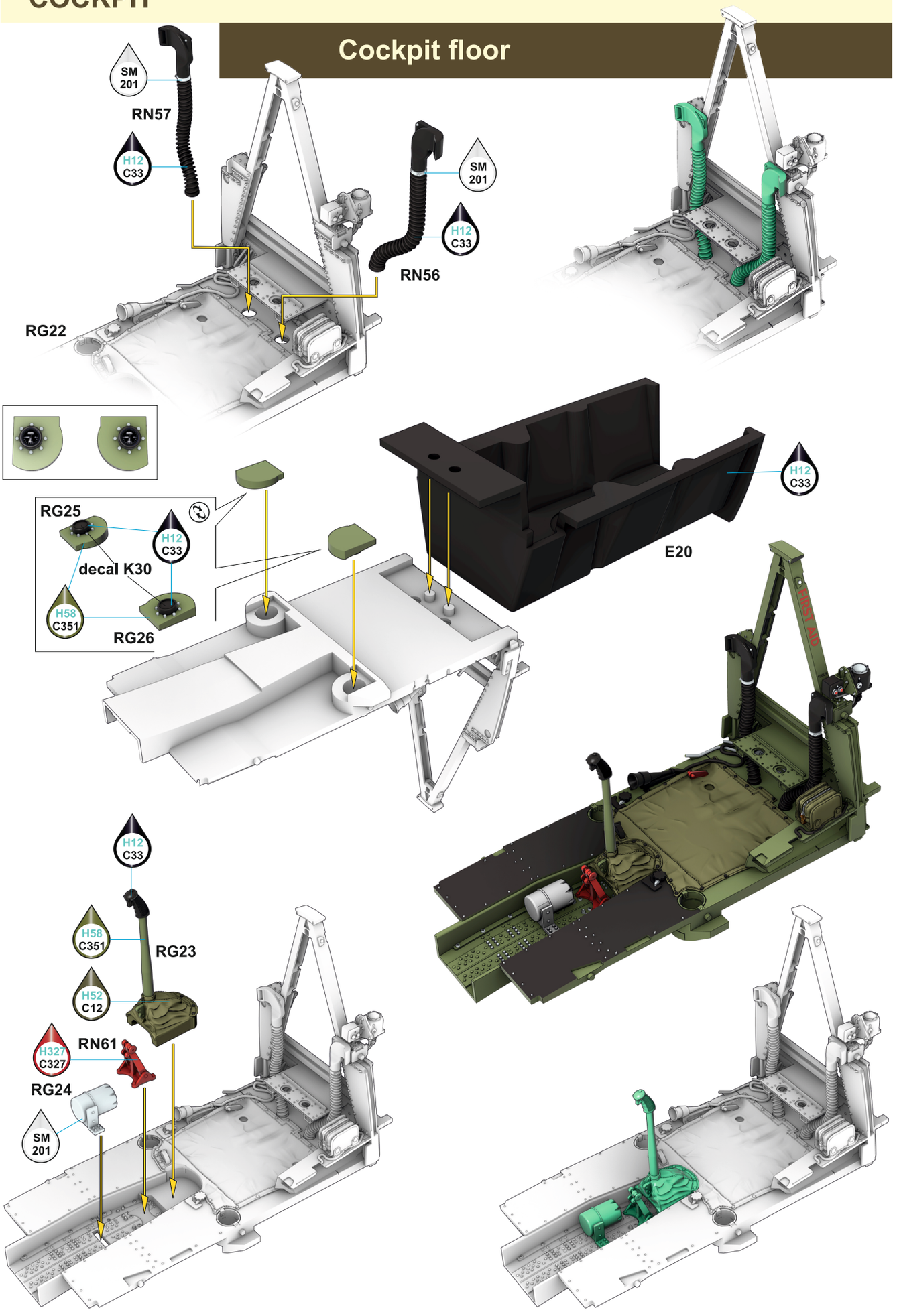

COCKPIT

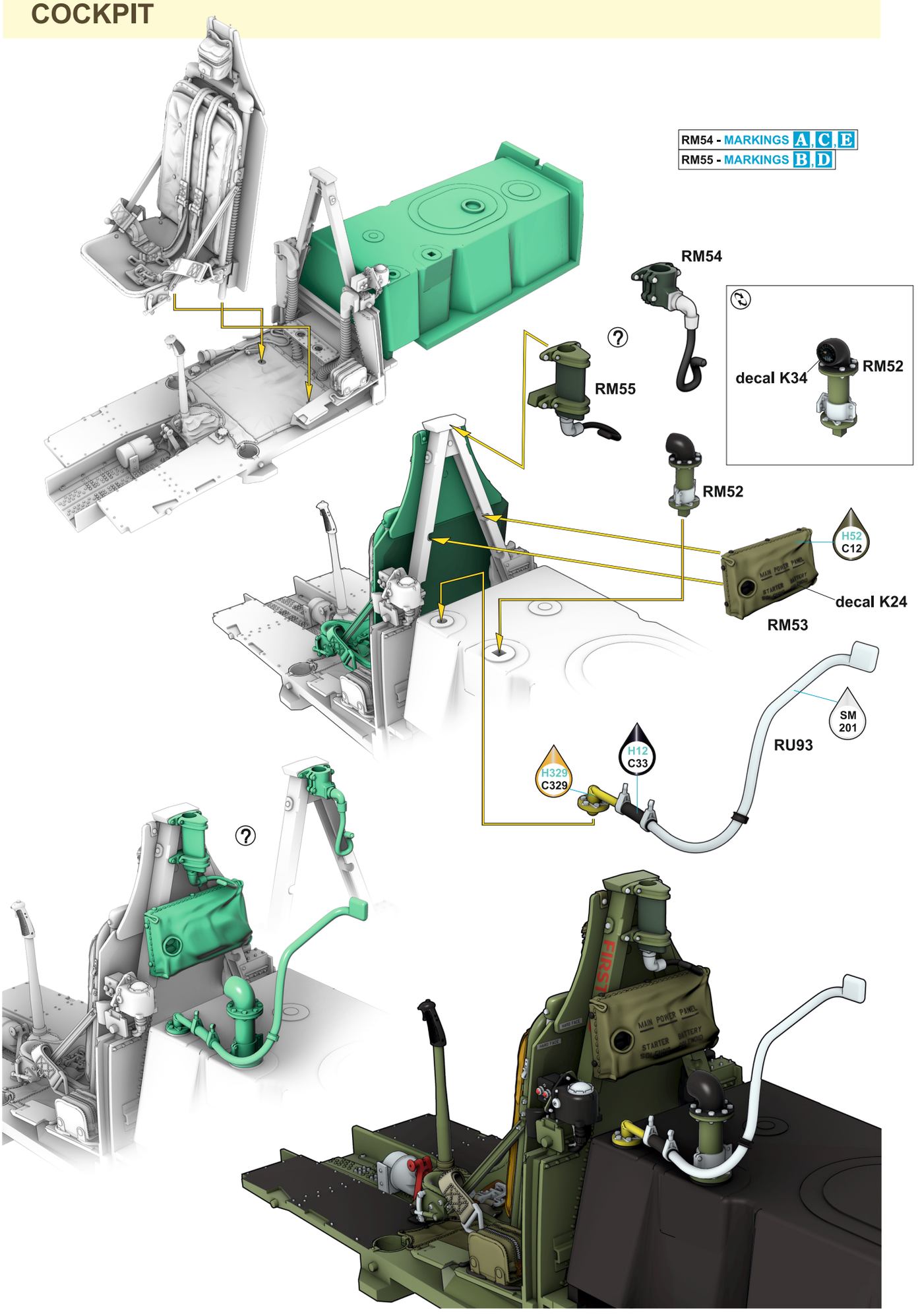
RM54 - MARKINGS A,C,E
RM55 - MARKINGS B,D
RM54
RM55
RM52
decal K34
RM52
H52
C12
decal K24
RM53
SM
201
RU93
H12
C33
H329
C329
FIRST
MAIN POWER PANEL
STARTER
BATTERY

Radio equipment

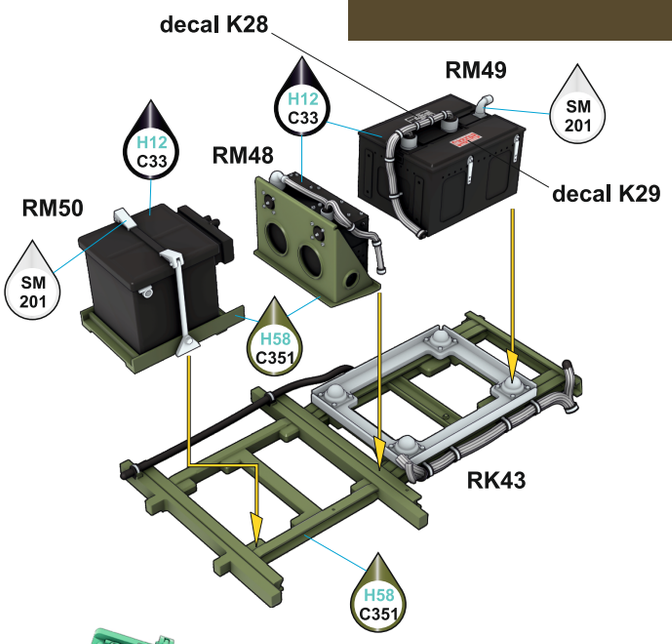

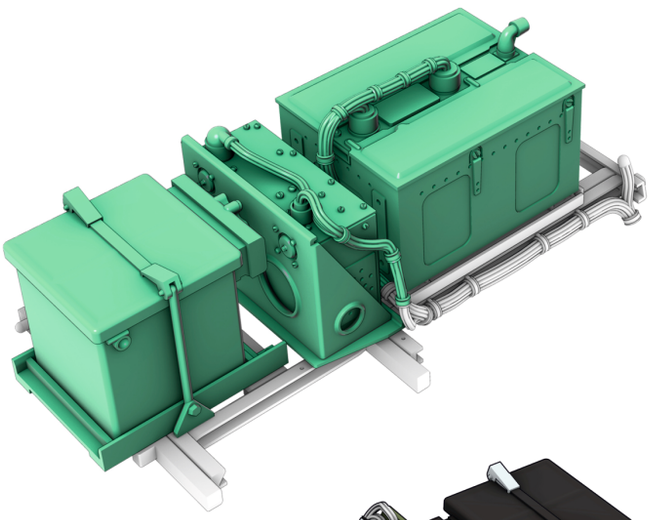

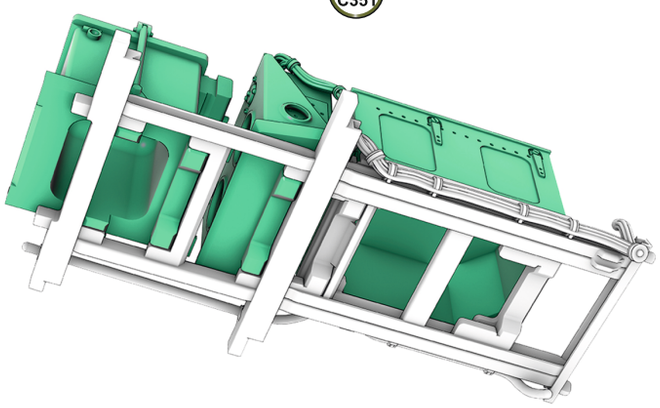



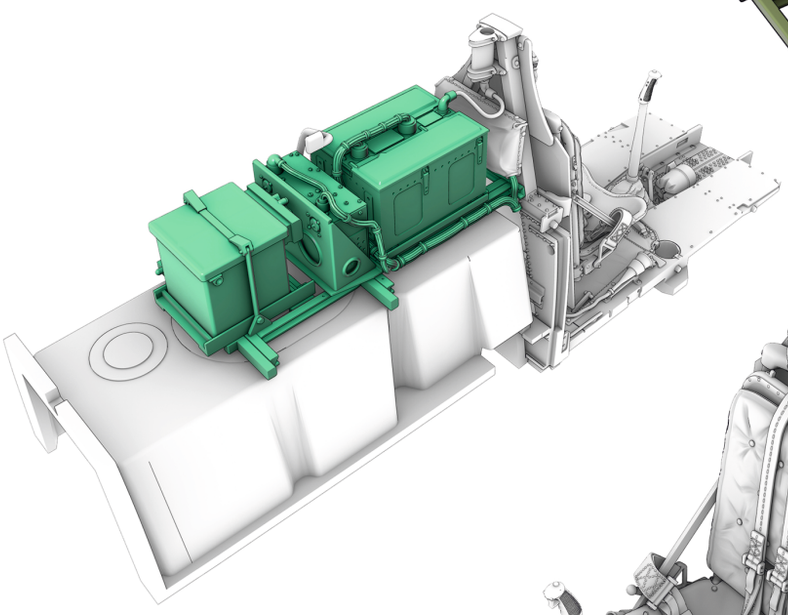

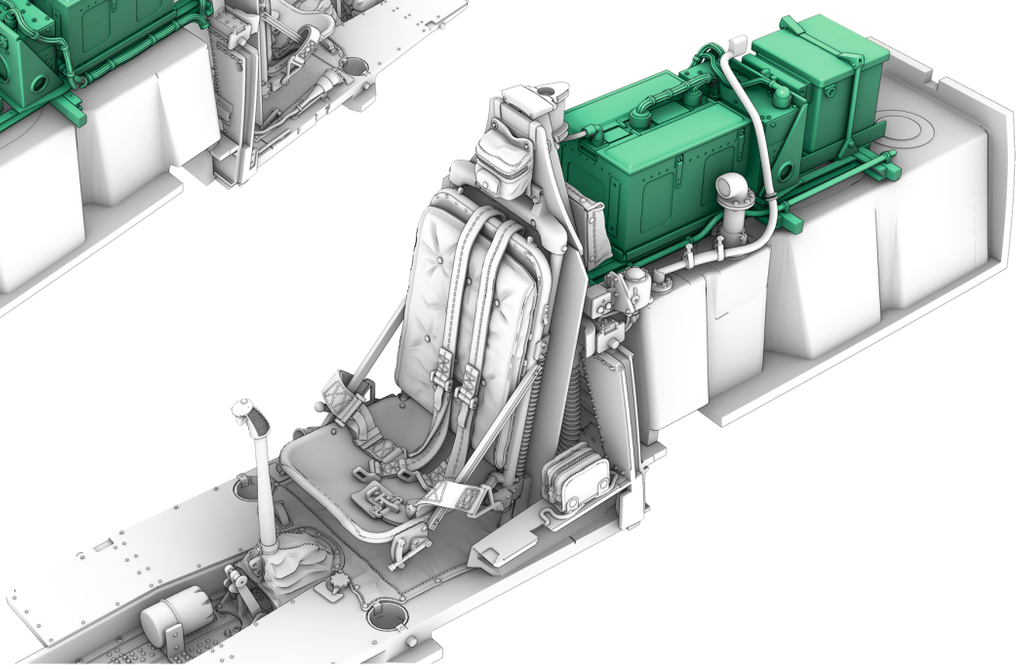

COCKPIT

Right side panel

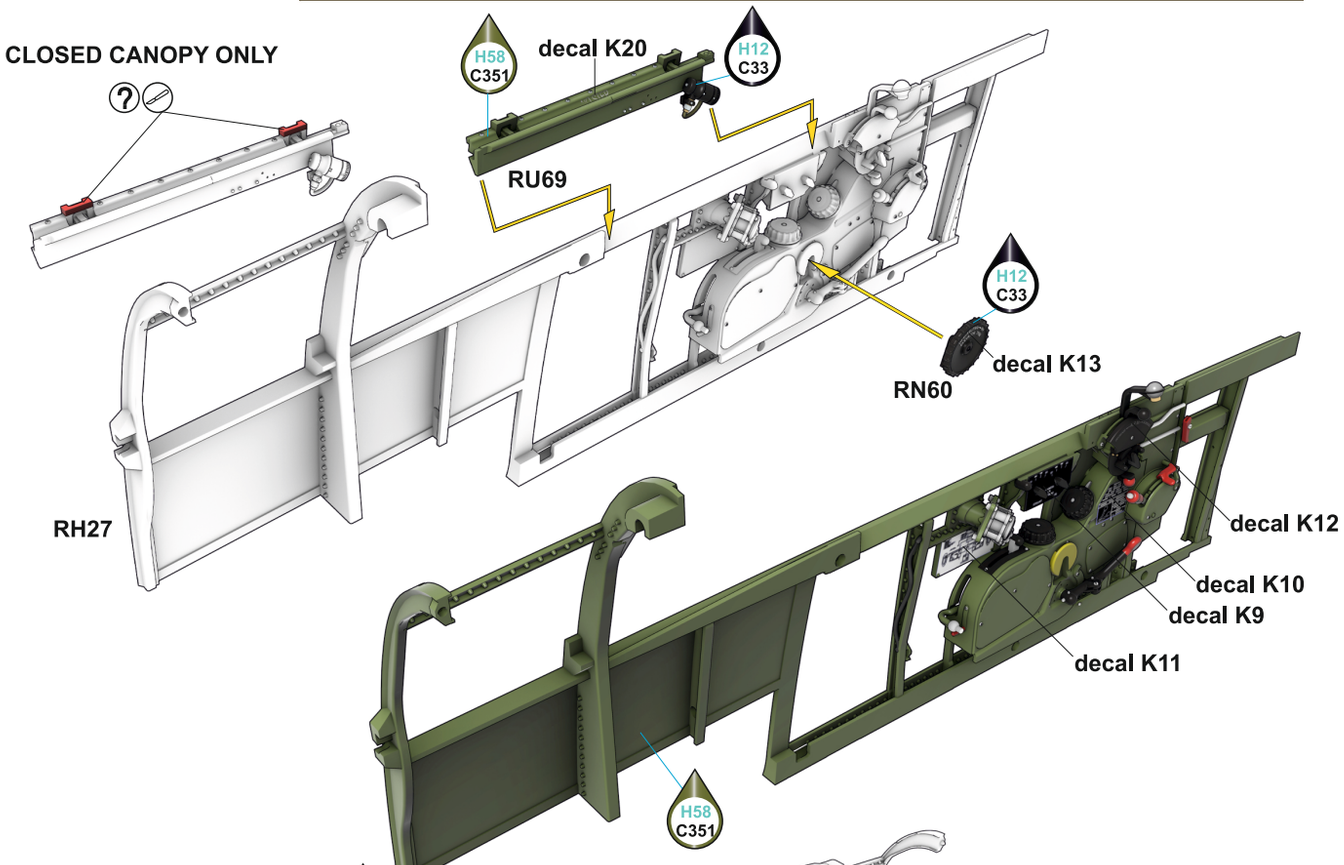

Left side panel

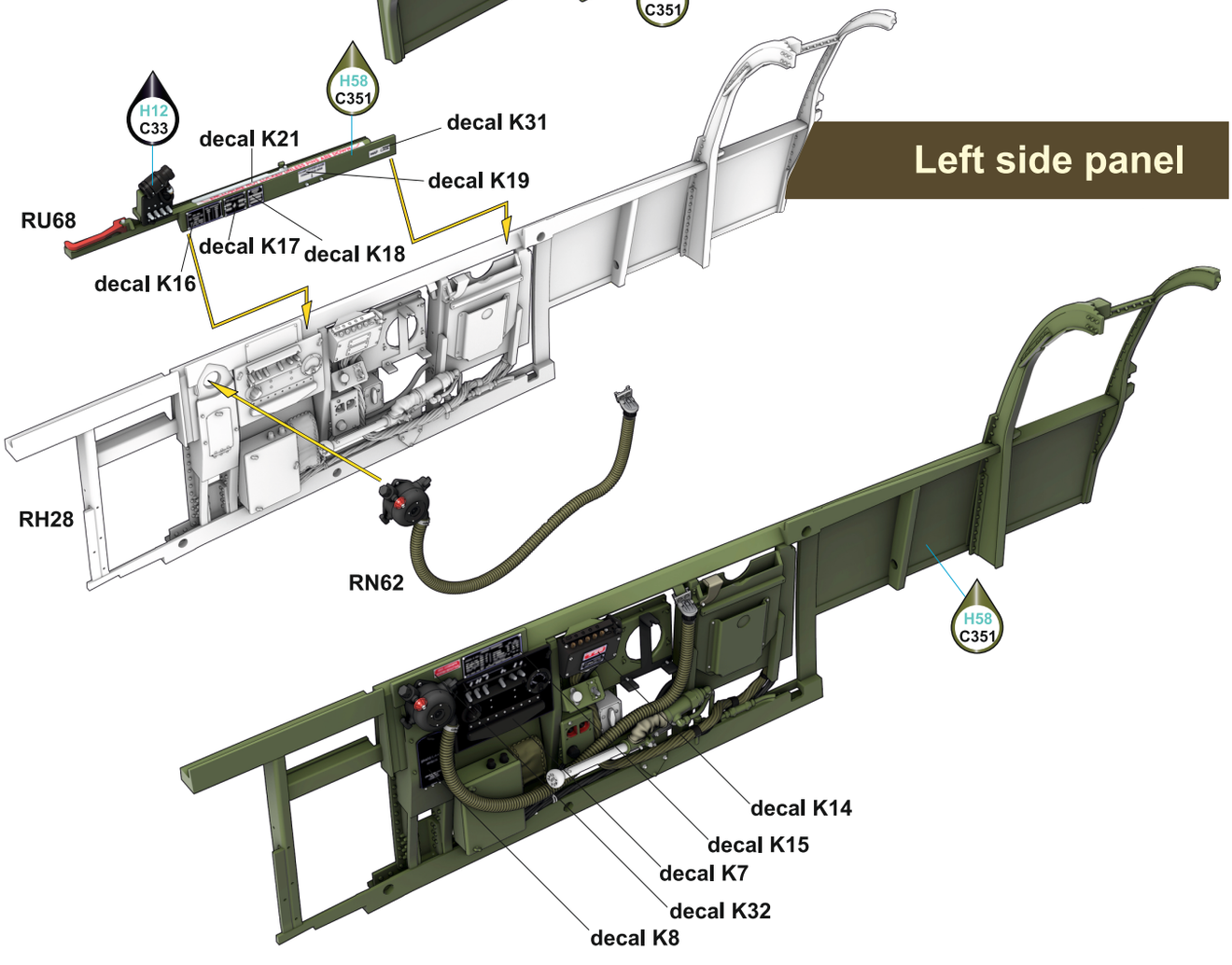

COCKPIT

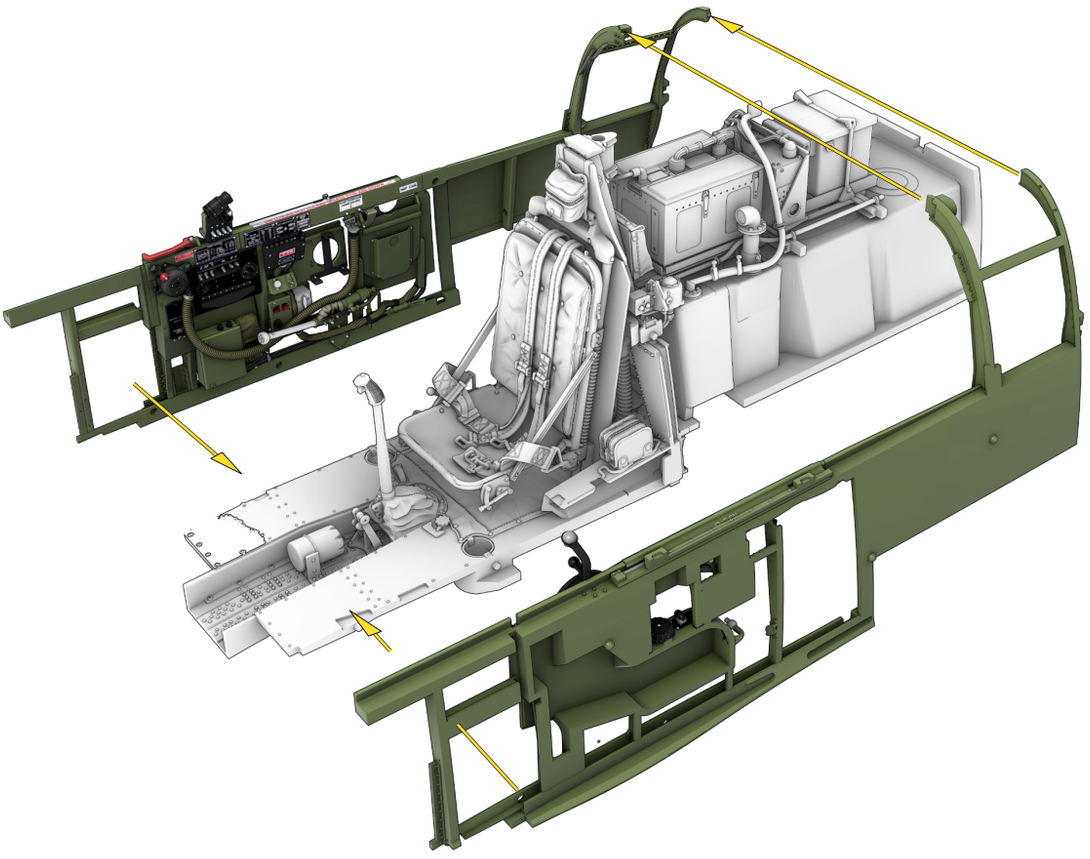

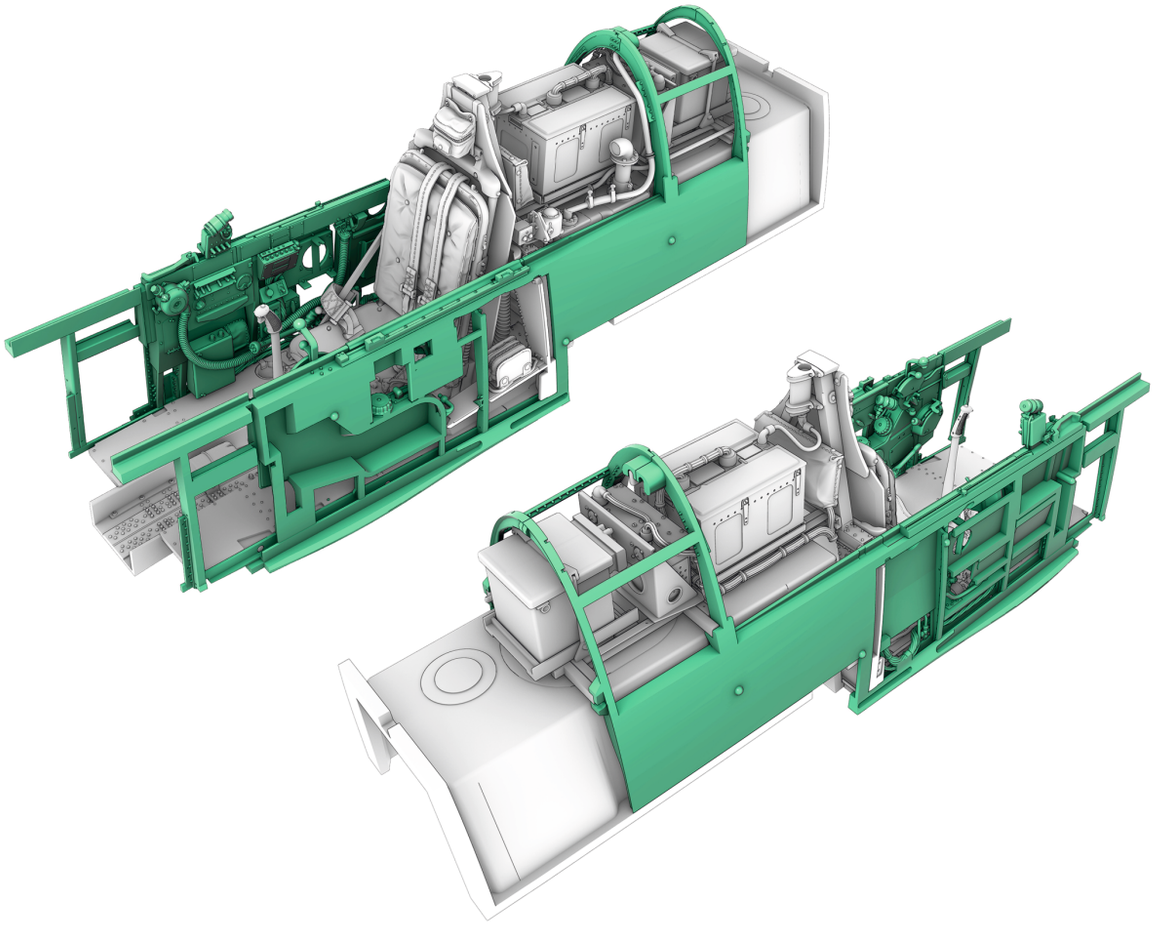

FUSELAGE

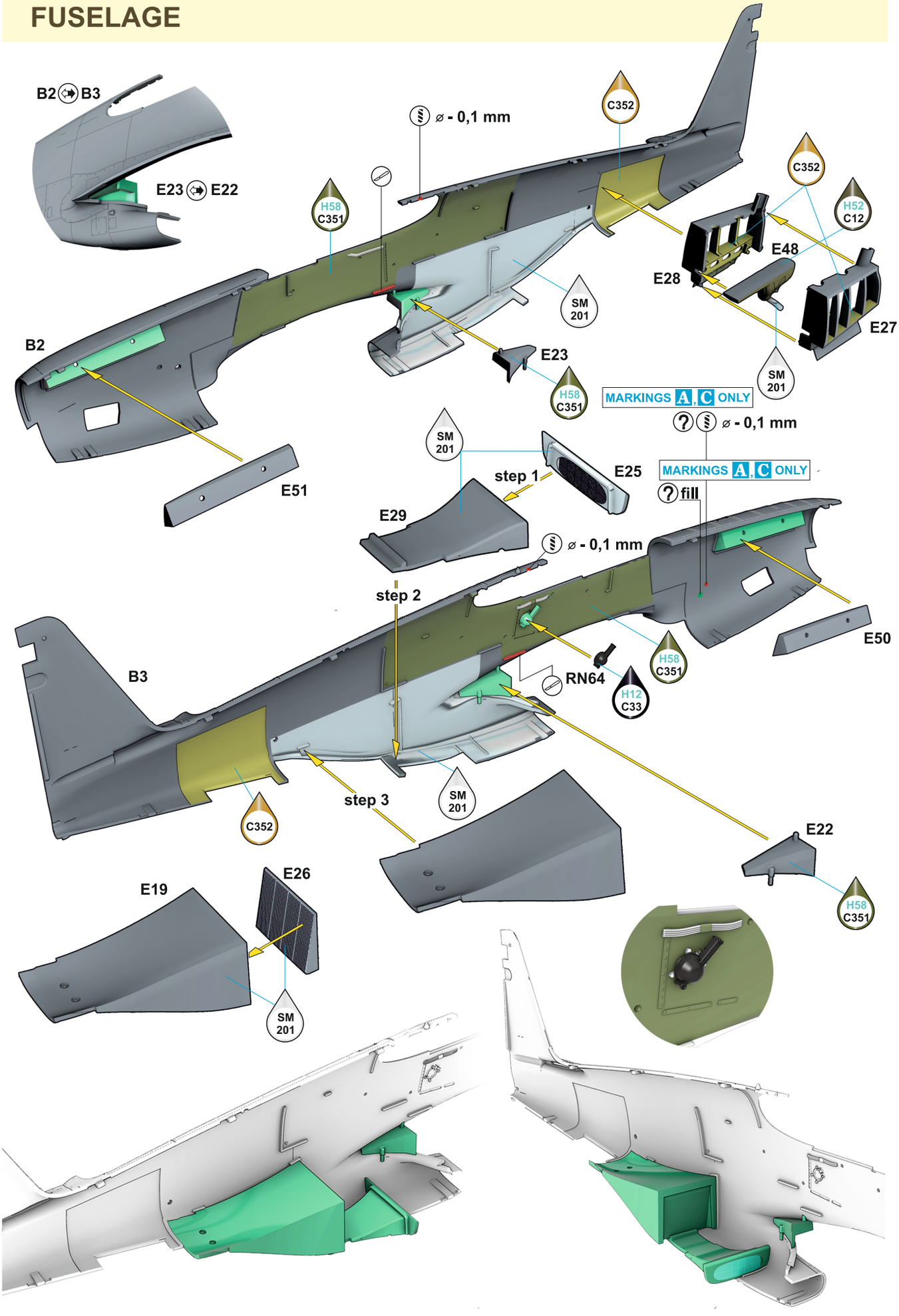
B2 B3
E23 E22
⌀ - 0,1 mm
C352
H58 C351
SM 201
B2
E51
E23
H58 C351
C352
H52 C12
E48
E28
E27
SM 201
MARKINGS A, C ONLY
? ⌀ - 0,1 mm
SM 201
step 1
E25
MARKINGS A, C ONLY
? fill
E29
⌀ - 0,1 mm
step 2
E50
B3
RN64
H58 C351
H12 C33
step 3
SM 201
C352
E22
H58 C351
E19
E26
SM 201

FUSELAGE

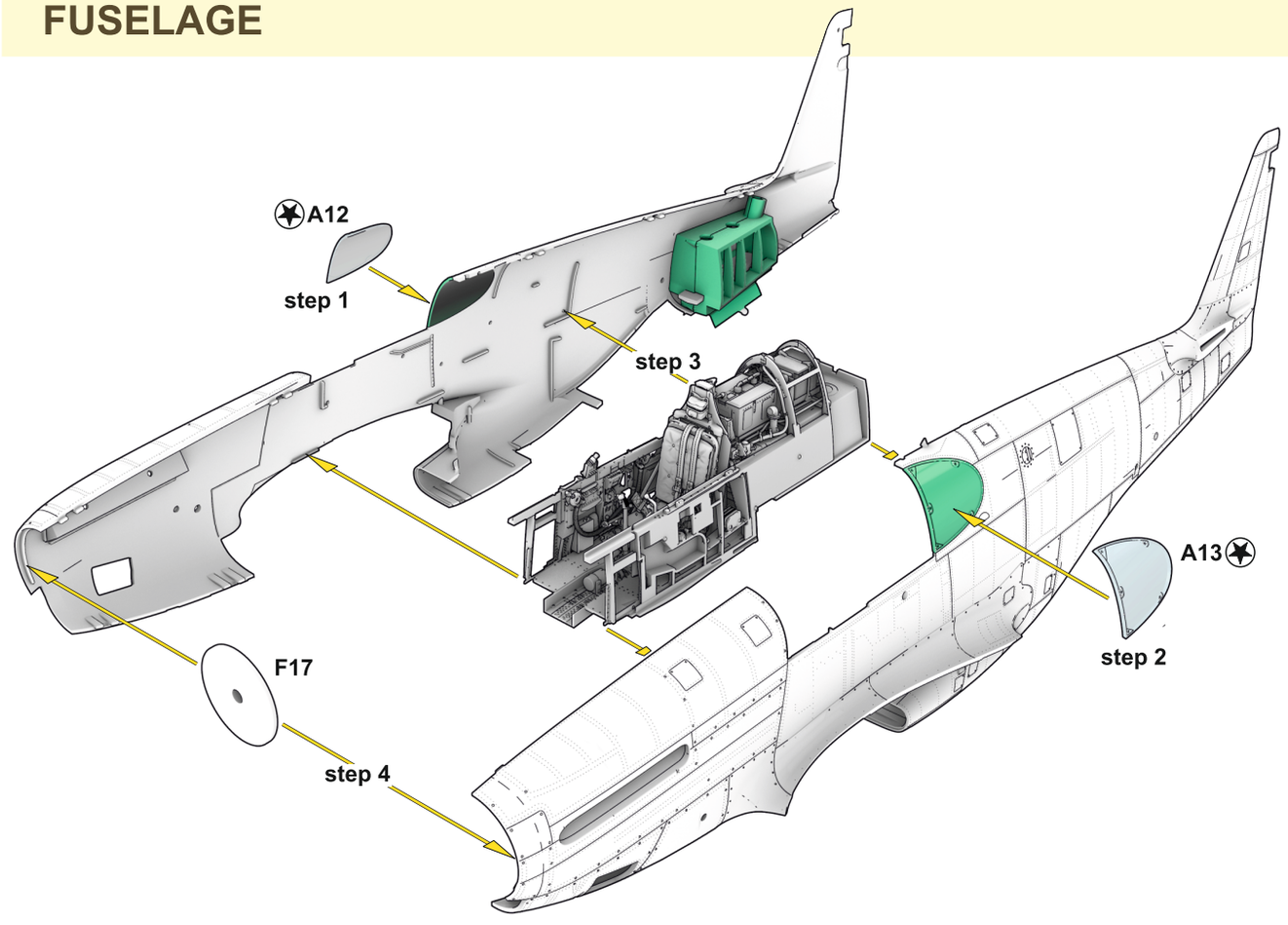

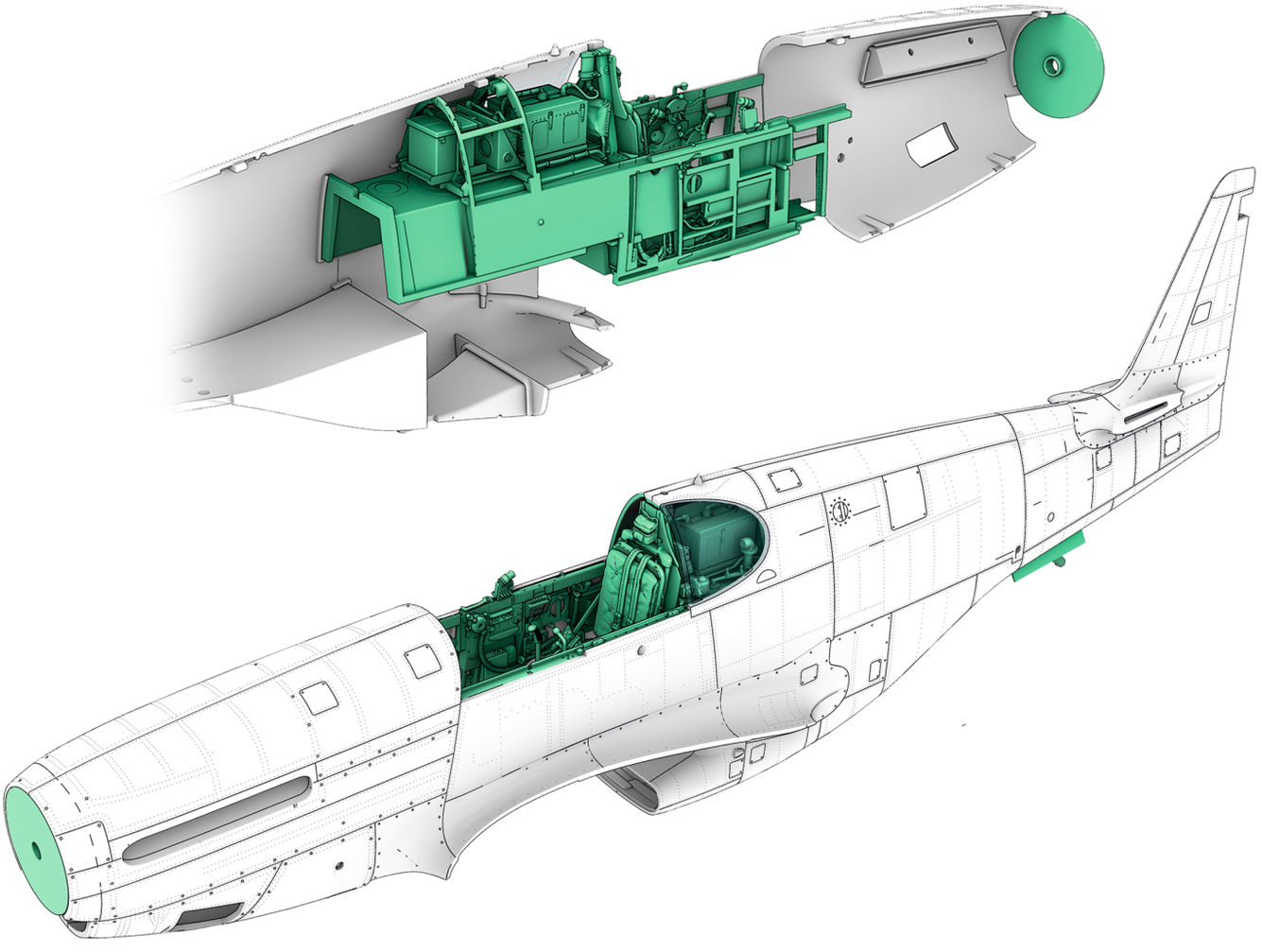

MAIN LANDING GEAR BAY

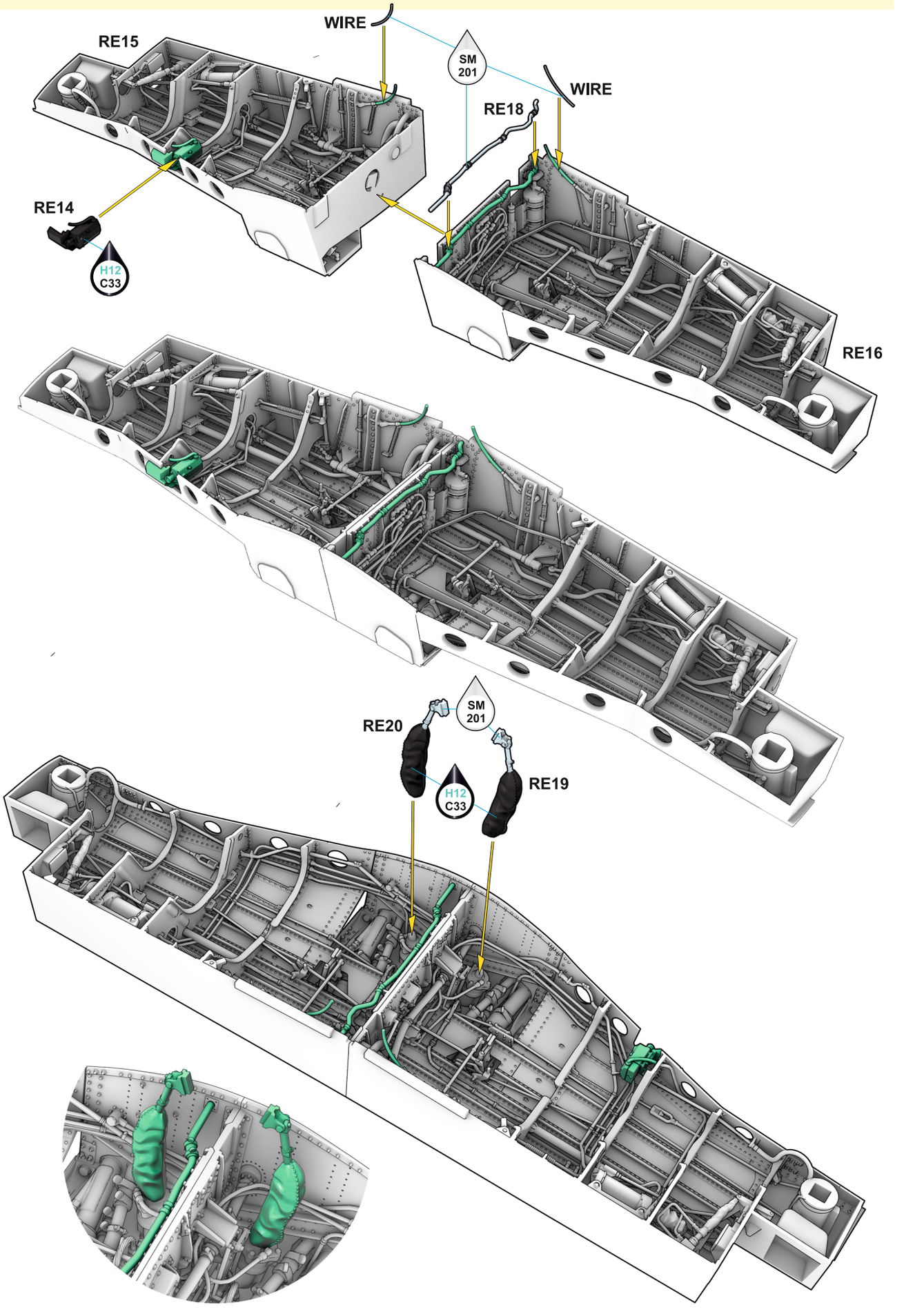

MAIN LANDING GEAR BAY

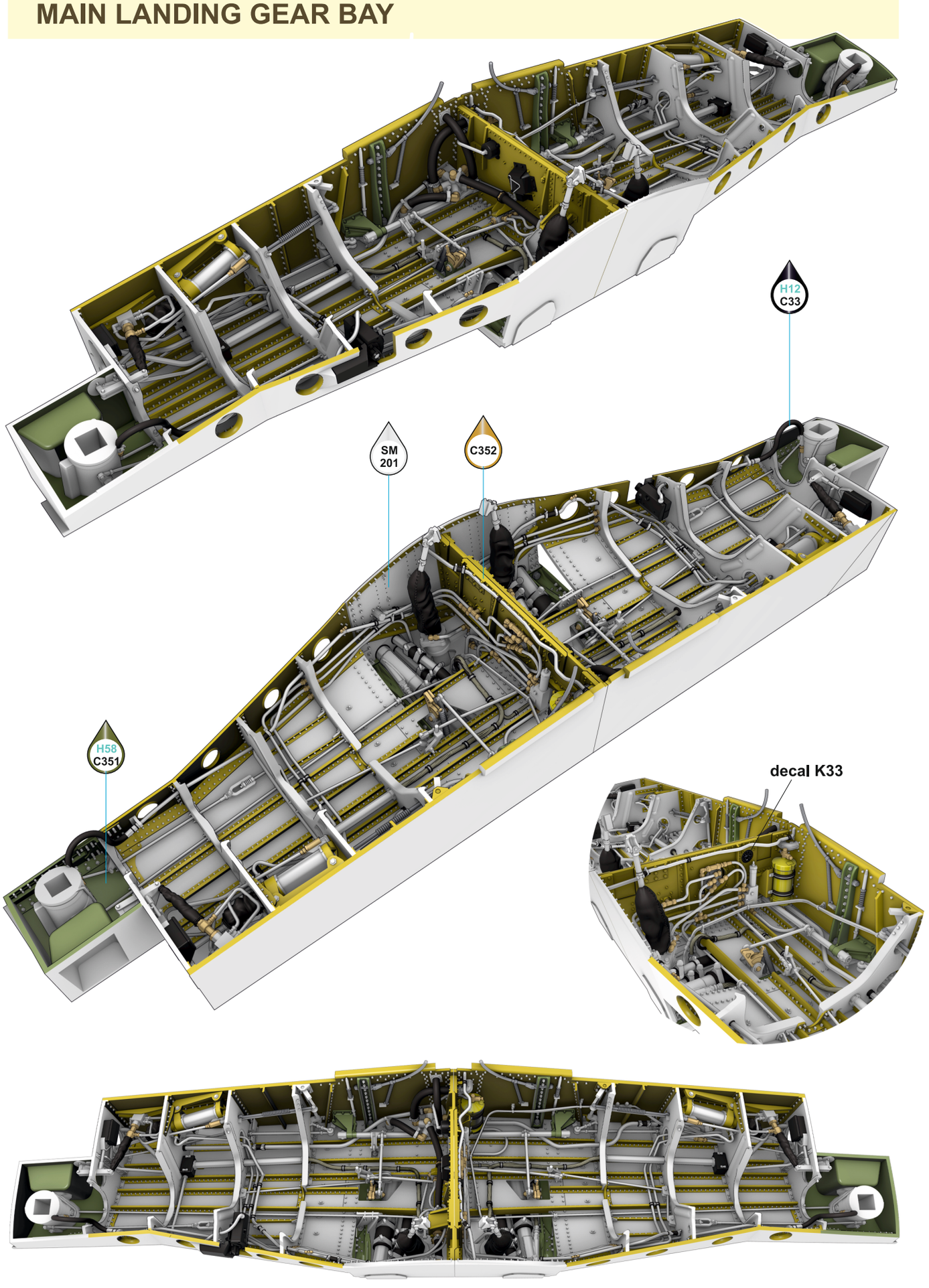

WINGS

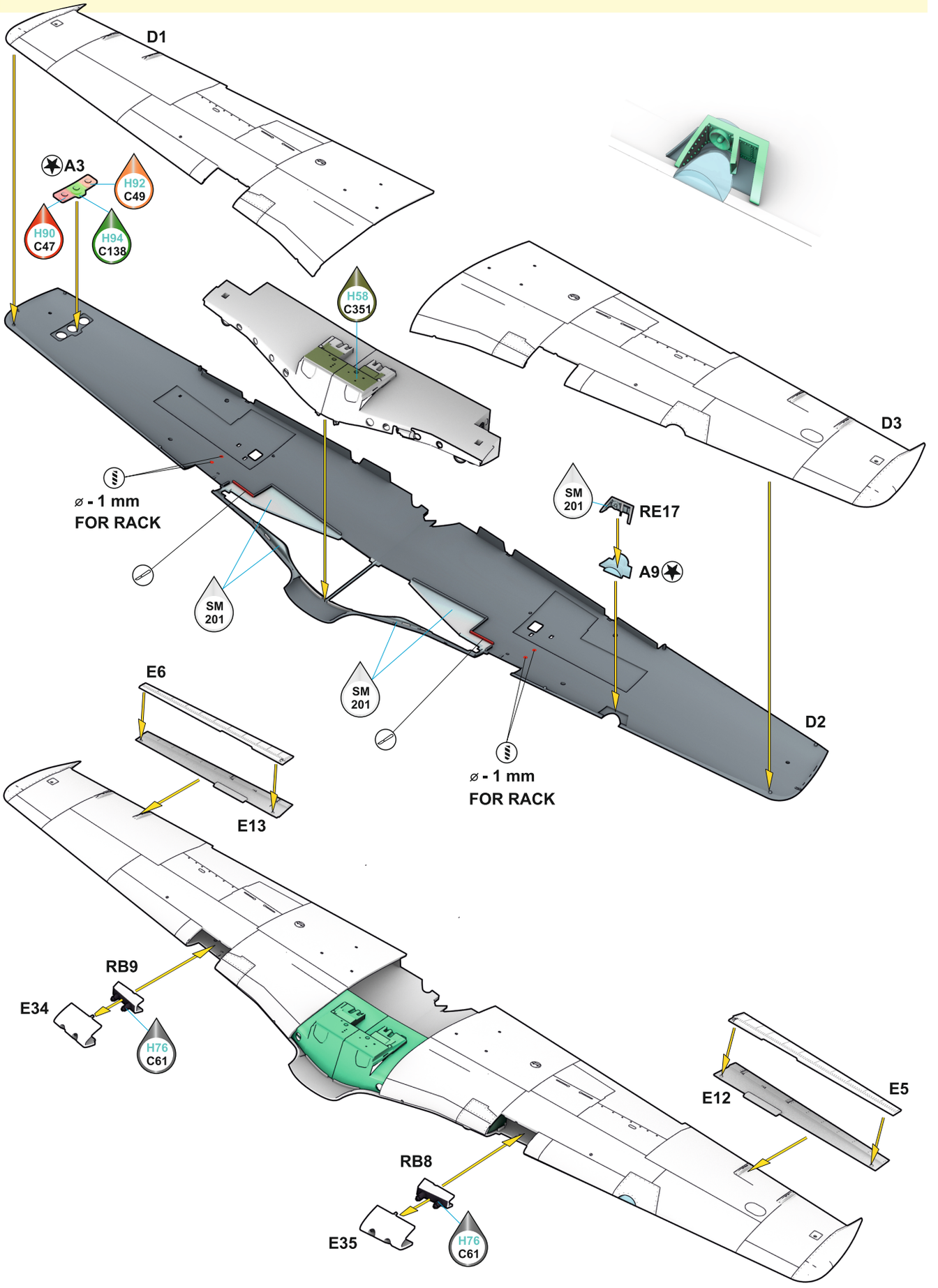
D1
A3
H92
C49
H90
C47
H94
C138
H58
C351
D3
⌀ - 1 mm
FOR RACK
SM
201
SM
201
SM
201
RE17
A9
D2
E6
E13
⌀ - 1 mm
FOR RACK
RB9
E34
H76
C61
E12
E5
RB8
E35
H76
C61

WING-TO-FUSELAGE ATTACHMENT

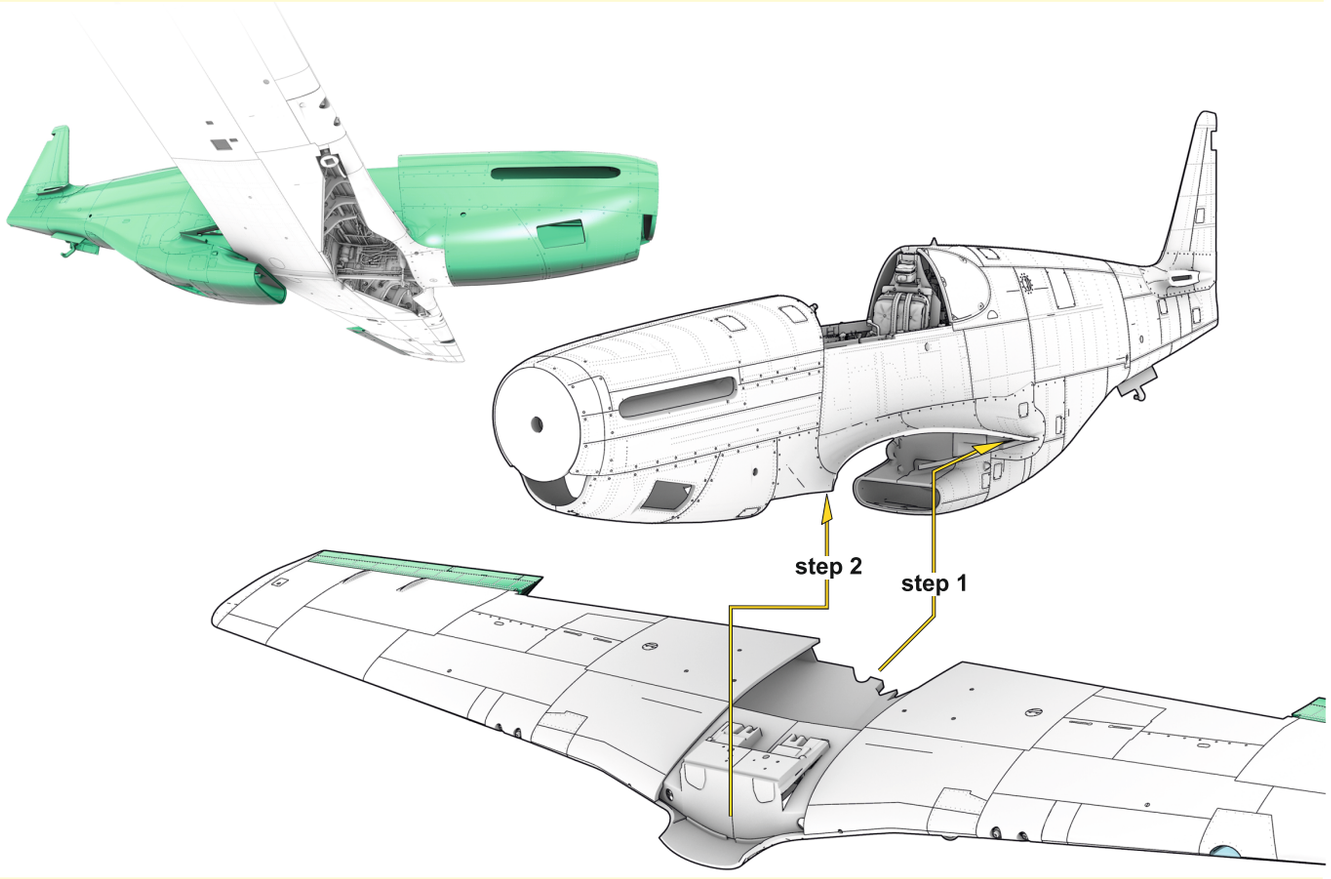

FUSELAGE DETAIL ASSEMBLY

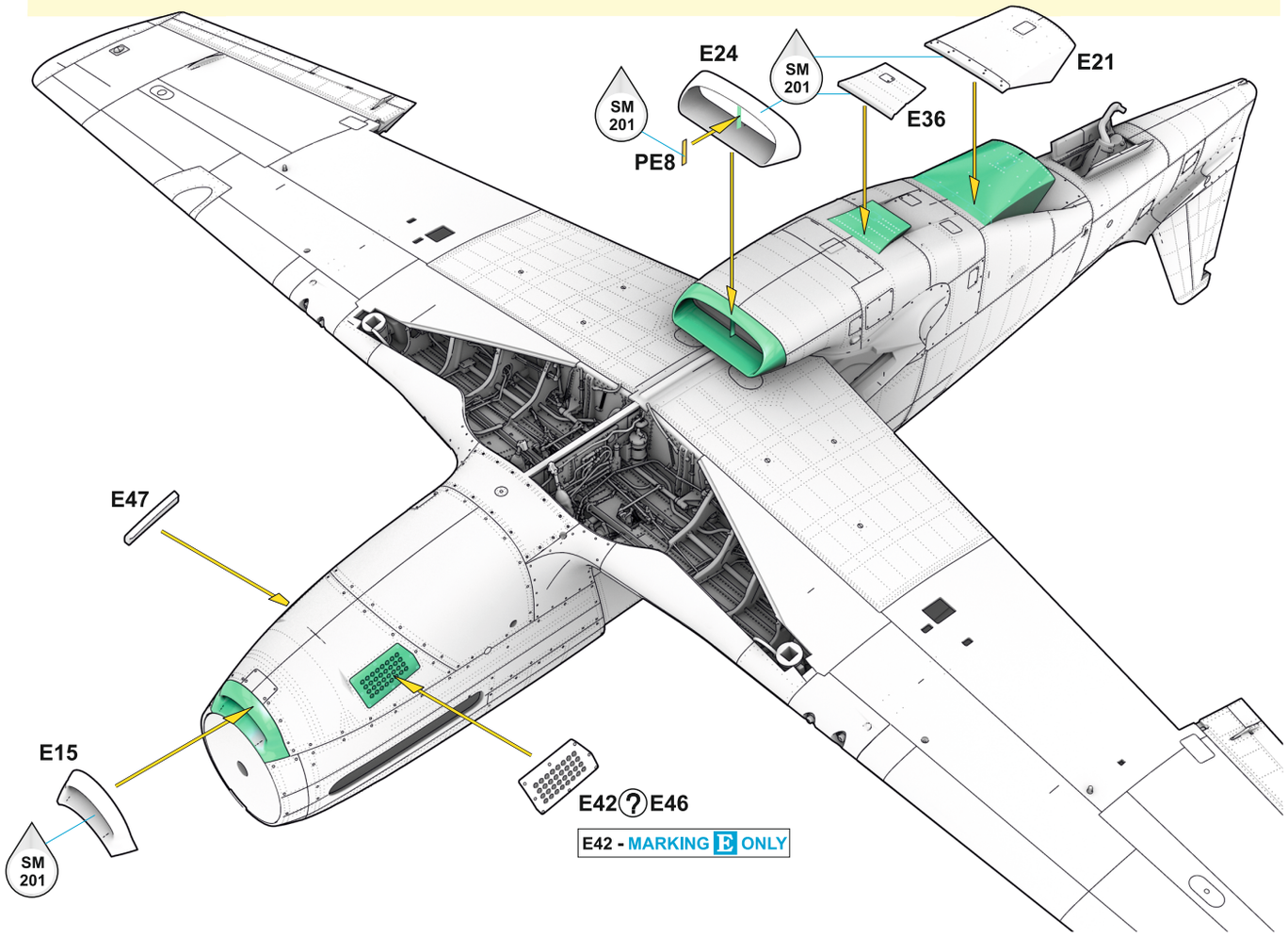

EMPENNAGE

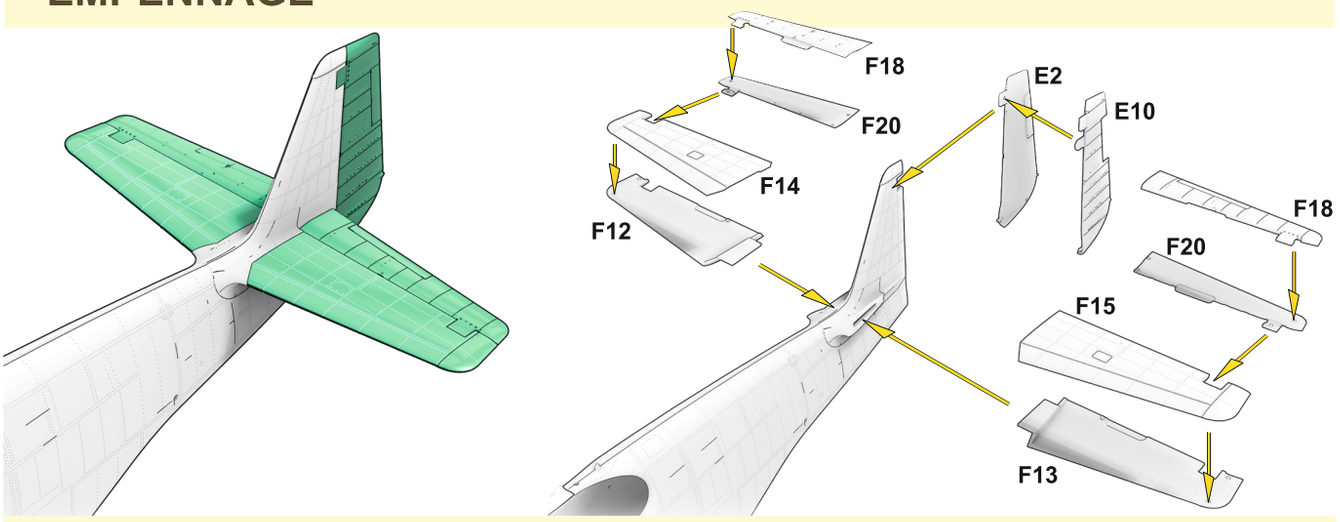

FORWARD COCKPIT ASSEMBLY

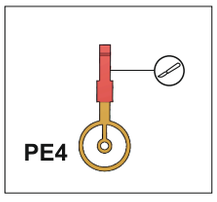

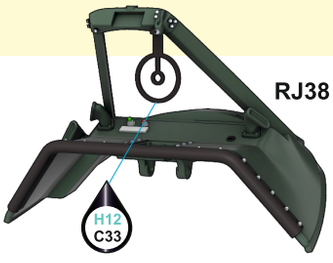

MARKINGS D, E

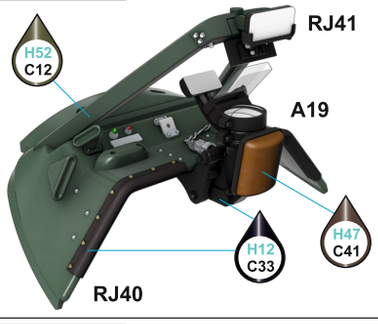

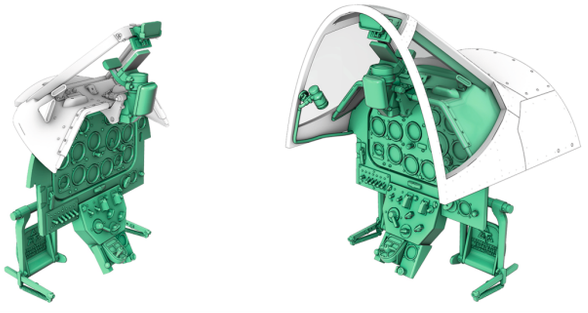

MARKINGS A, B

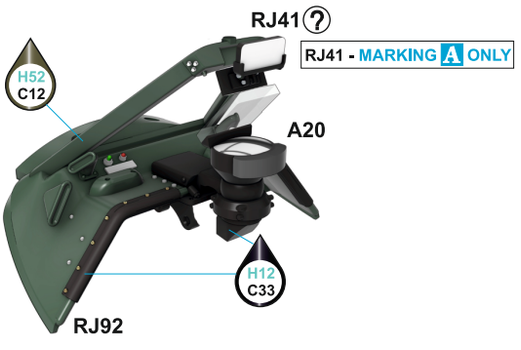

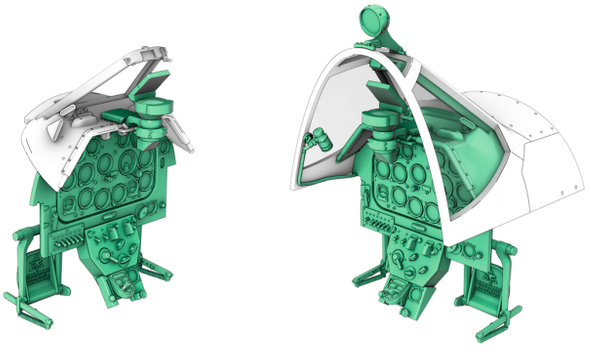

MARKING C



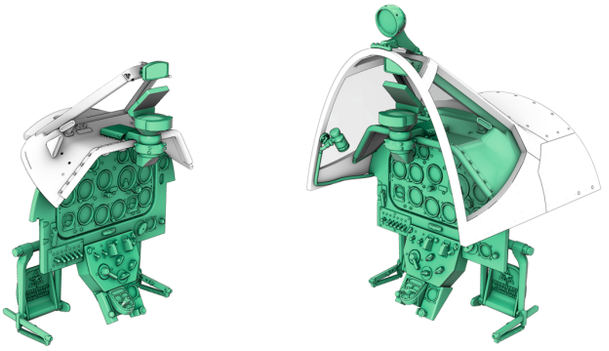

FORWARD COCKPIT ASSEMBLY

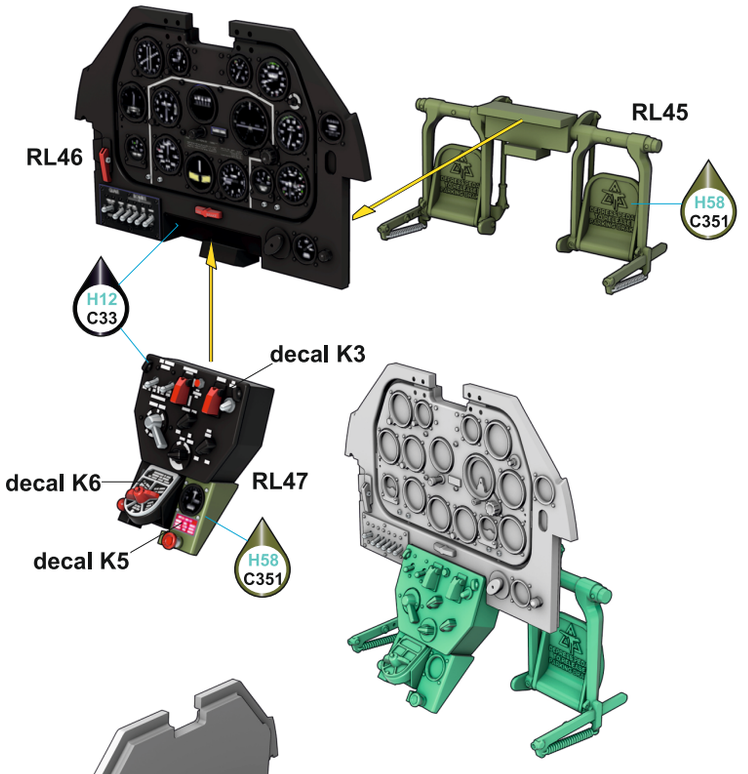



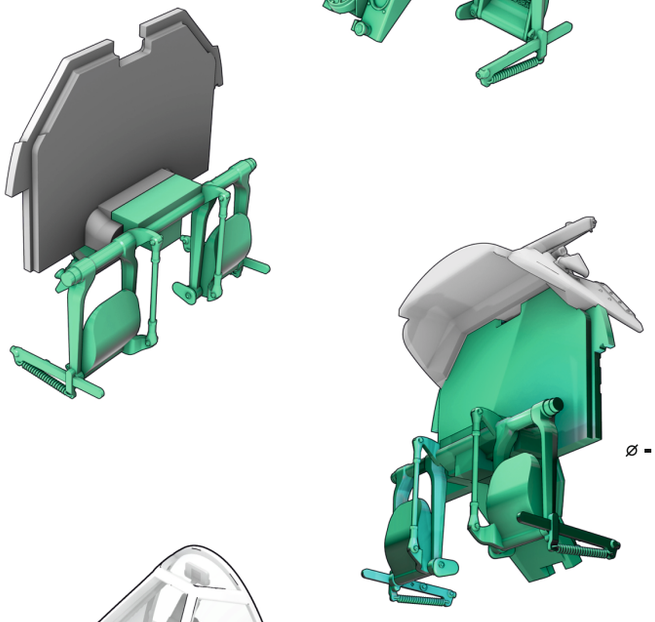

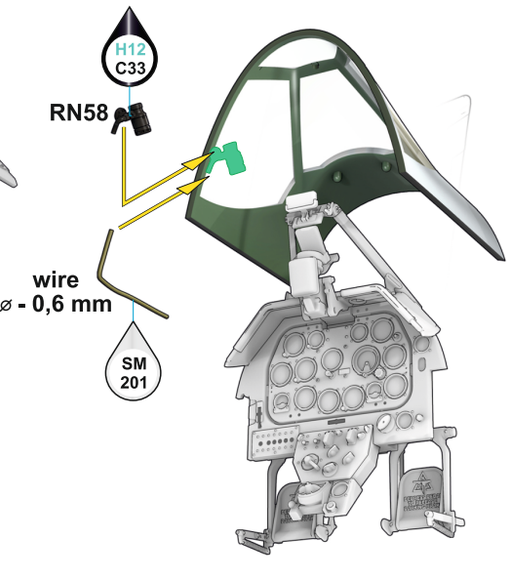

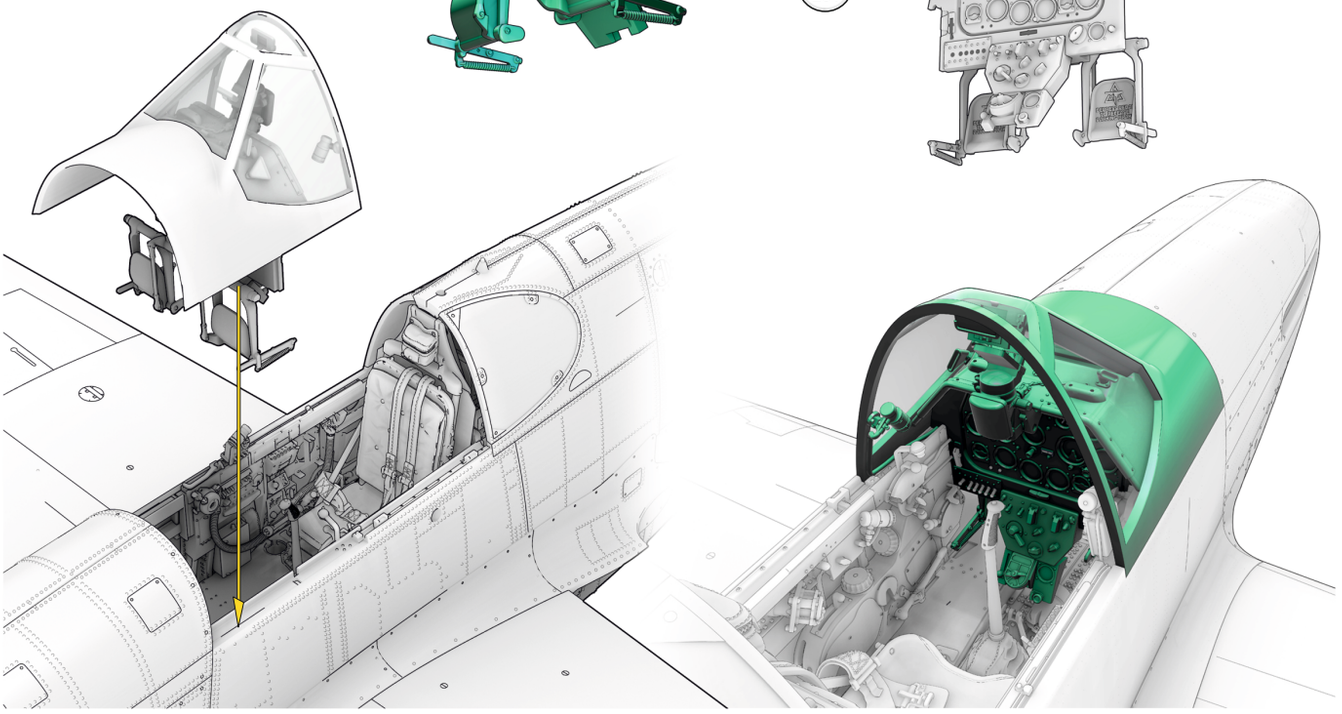

LANDING GEAR

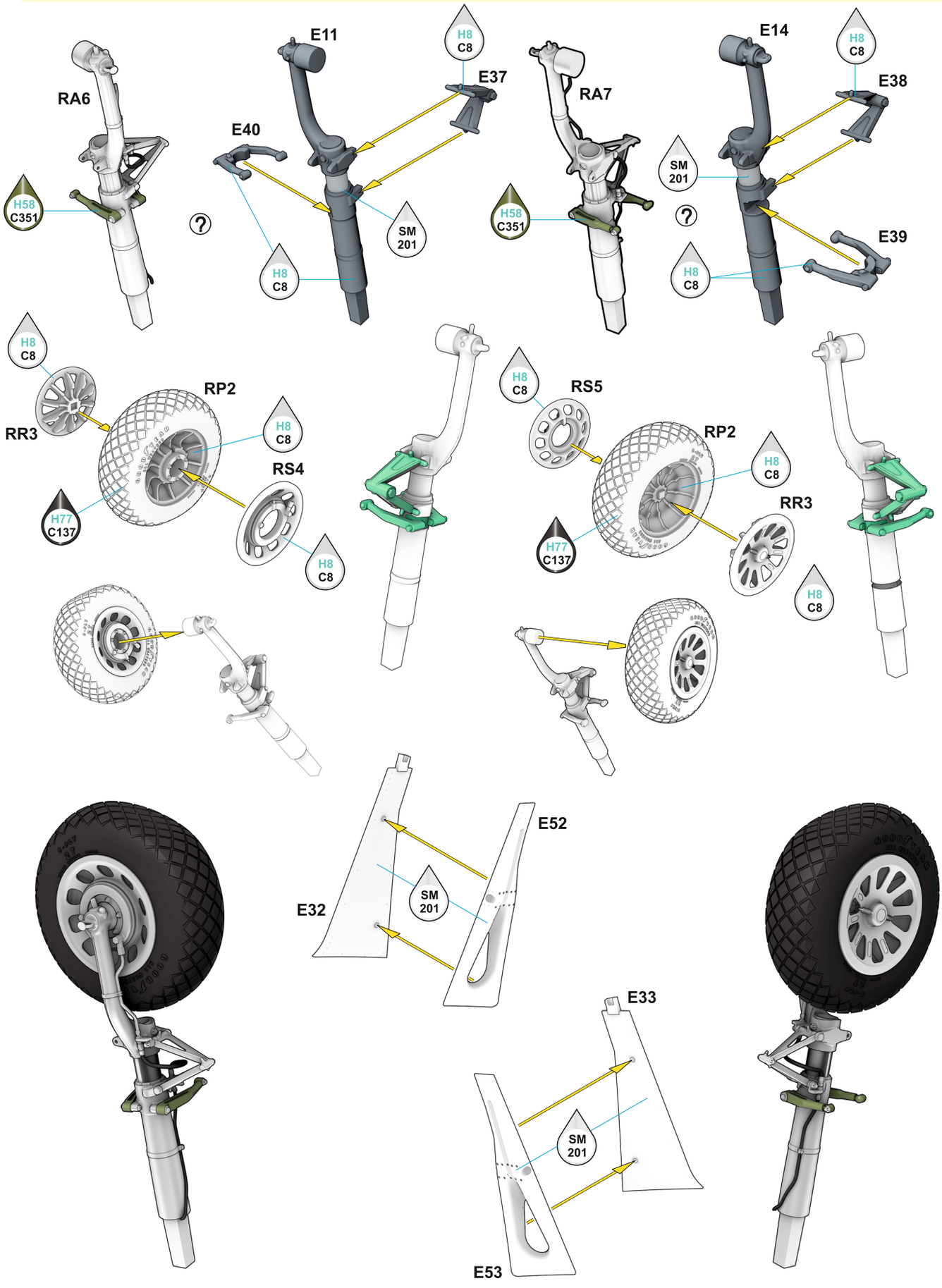

LANDING FLAPS

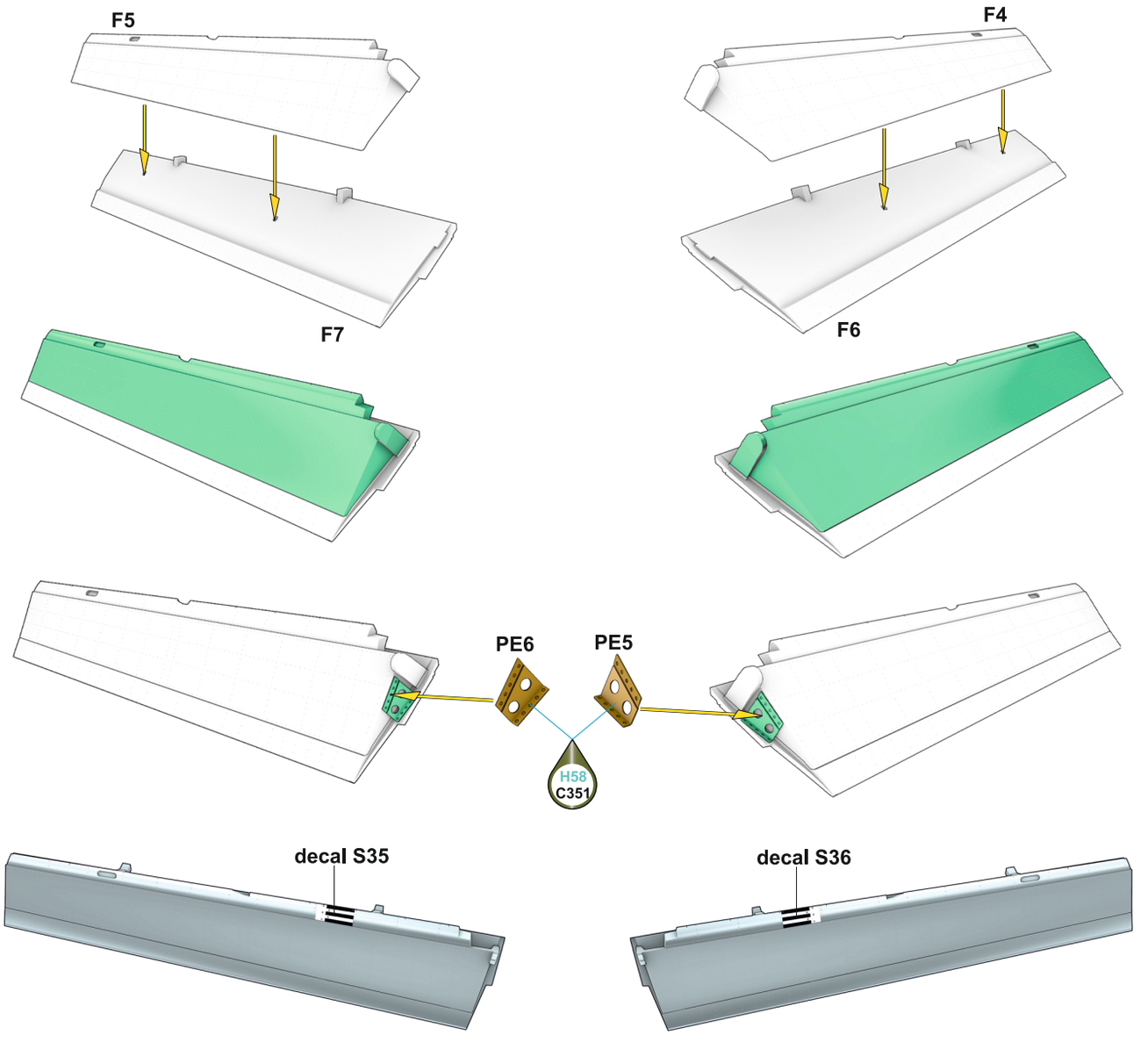

PROPELLER

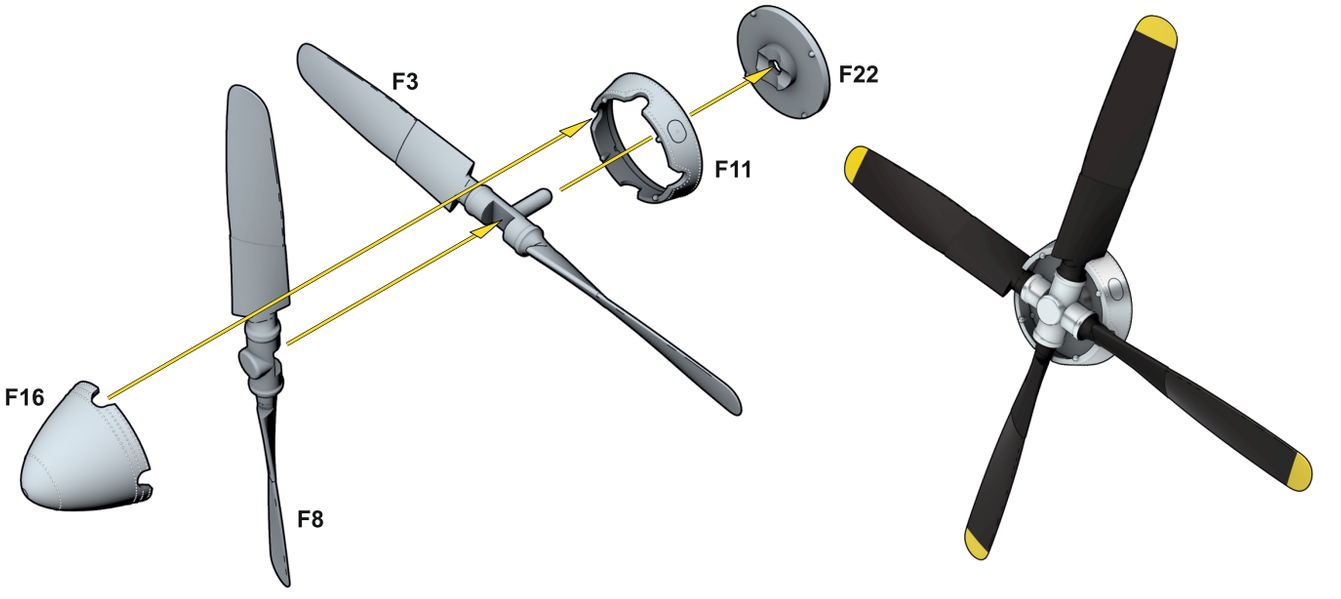

UNDERCARRIAGE

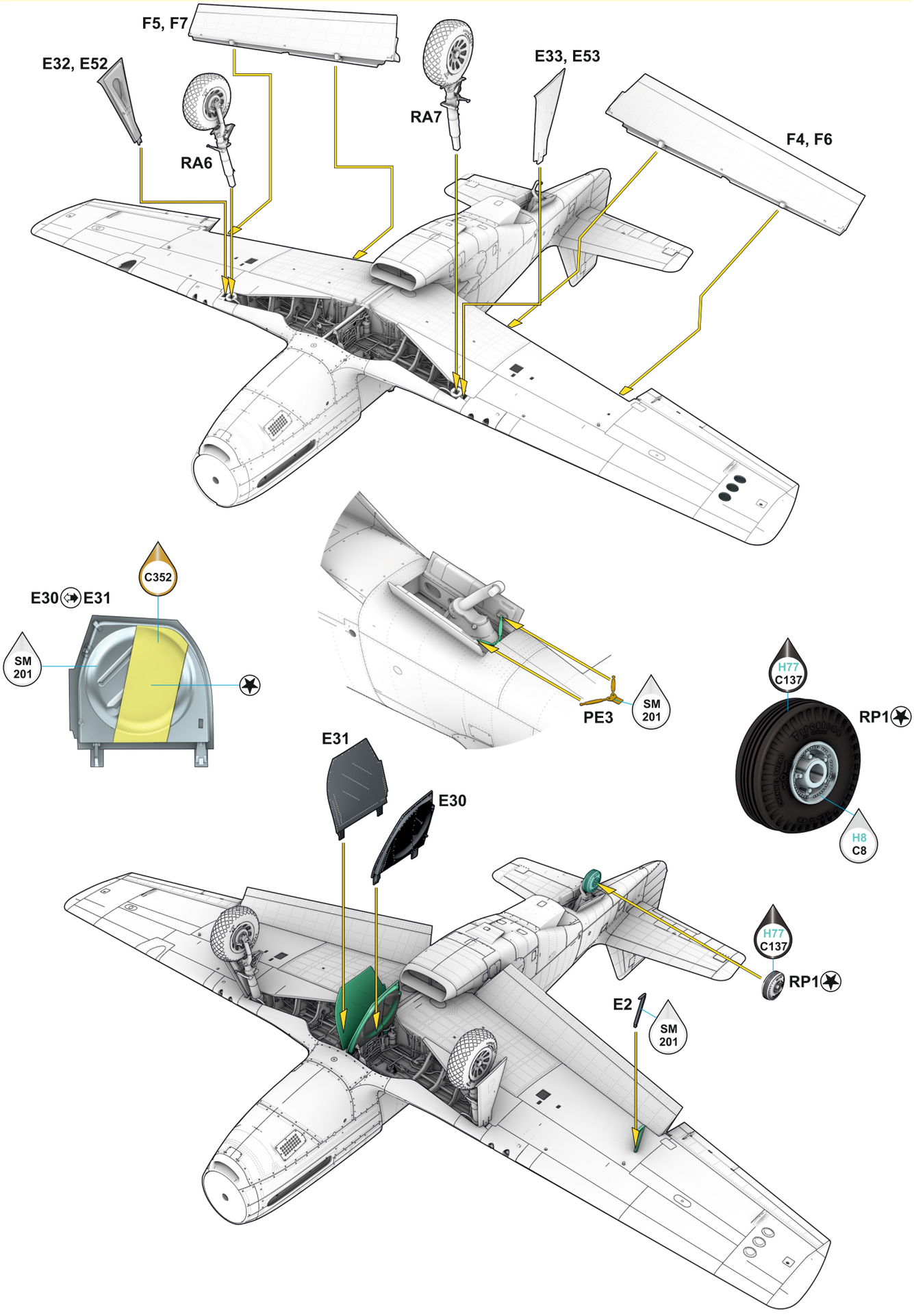

CANOPY

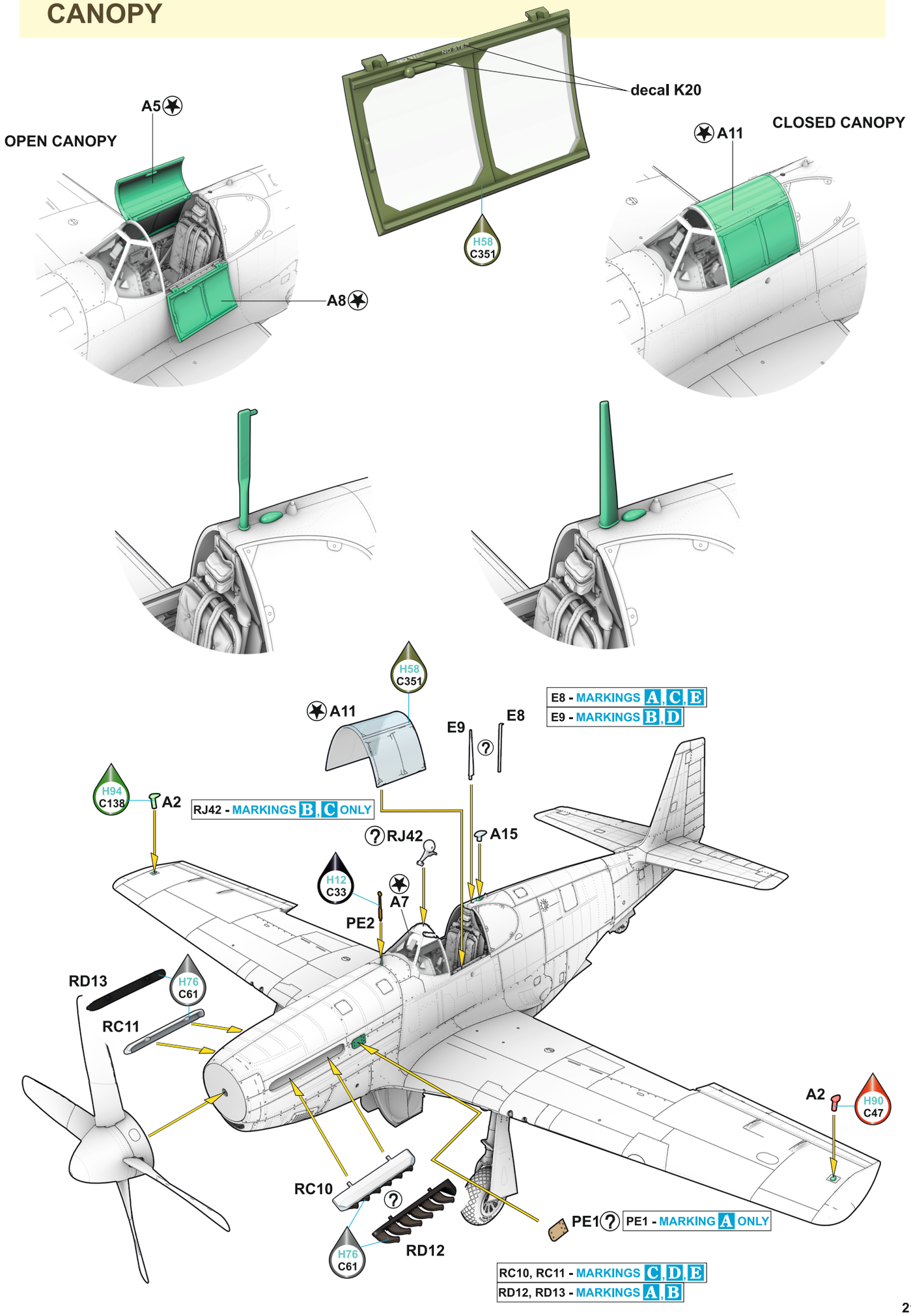
decal K20
H58
C351
OPEN CANOPY
A5
A8
CLOSED CANOPY
A11
A11
H58
C351
E8 - MARKINGS A, C, E
E9 - MARKINGS B, D
E9
E8
H94
C138
A2
RJ42 - MARKINGS B, C ONLY
RJ42
A15
H12
C33
A7
PE2
RD13
H76
C61
RC11
A2
H90
C47
RC10
PE1
PE1 - MARKING A ONLY
H76
C61
RD12
RC10, RC11 - MARKINGS C, D, E
RD12, RD13 - MARKINGS A, B

DROP TANKS

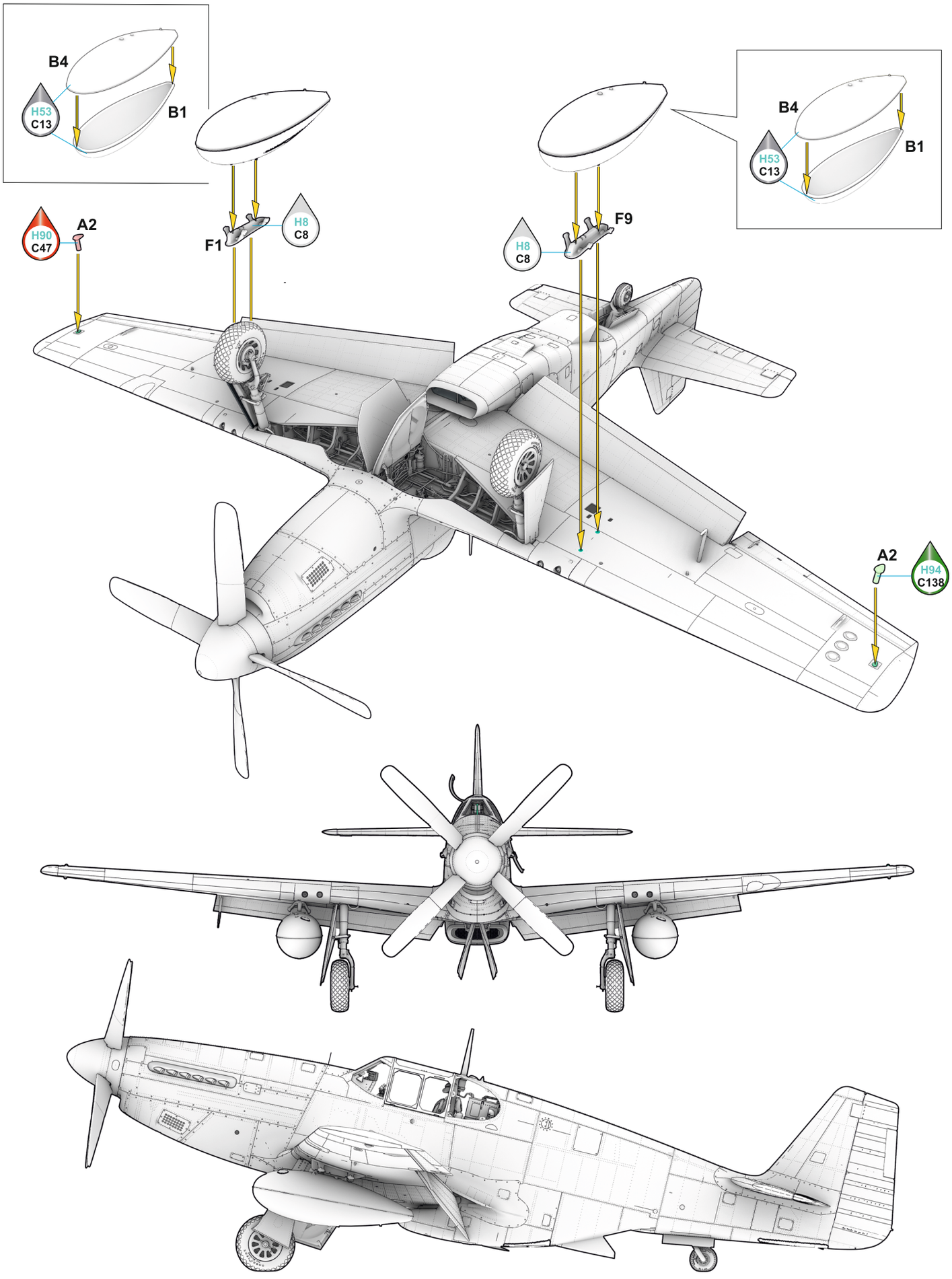

eduard
MASK
932012

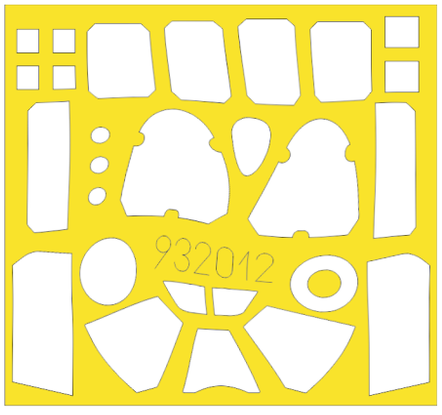

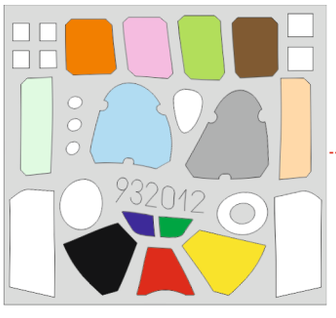

A11
?
A13 A5, A8 A7

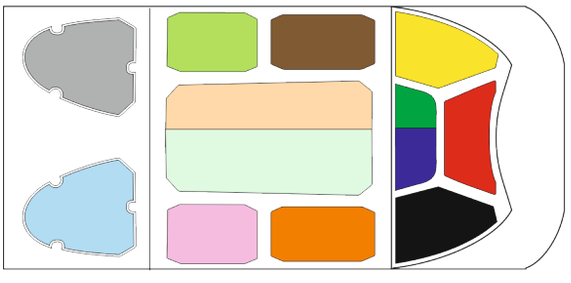

A12

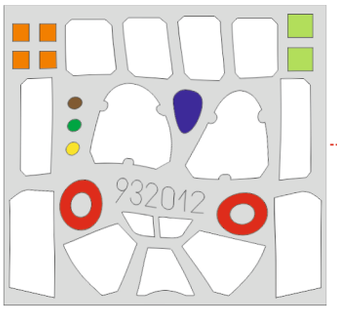

A20 A19 A3

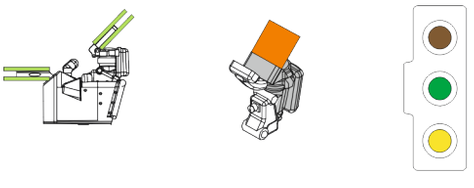

R1 A9

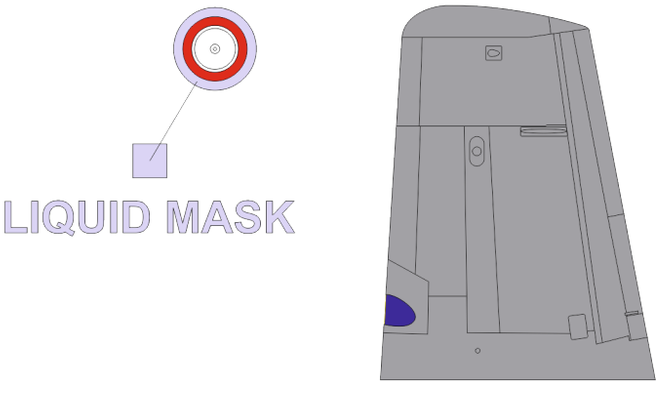

LIQUID MASK

A P-51B-7-NA, s/n 43-6913, Capt. Dominic S. Gentile, 336th FS, 4th FG, 8th AF, Debden, the United Kingdom, March-April 1944

While he finished the war with a total of 21.83 kills and six aircraft destroyed on the ground, Major Dominic Salvatore Gentile, the son of Italian immigrants, had already logged over 300 hours in his biplane before joining the Army. Because he did not meet the U.S. Army Air Force's educational requirements, he joined the ranks of the Canadian Air Force and in December 1941 was posted to Great Britain where he began to gain combat experience as a Spitfire pilot with No. 133 (Eagle) Squadron. He scored his first kills on August 19, 1942, shooting down a Ju 88 and an Fw 190. In September 1942, the Eagle Squadrons formed the basis of the 4th Fighter Group armed with Thunderbolts, which were replaced by Mustangs in late February 1944. Gentile scored his first kill flying this type on March 3 when he claimed one Do 217. Along with his wingman John T. Godfrey, they were referred to as the Two-man Air Force or Captains Courageous. After three kills on April 8, he became the 8th AF's most successful fighter. As such, he demonstrated flyovers to a group of journalists at Debden and in the process crashed his "Shangri-La". He was grounded and subsequently returned to the US to help sell war bonds. After the war he stayed in the Air Force as a test pilot on the Wright Field and was killed in a crash with a T-33A on January 28, 1951

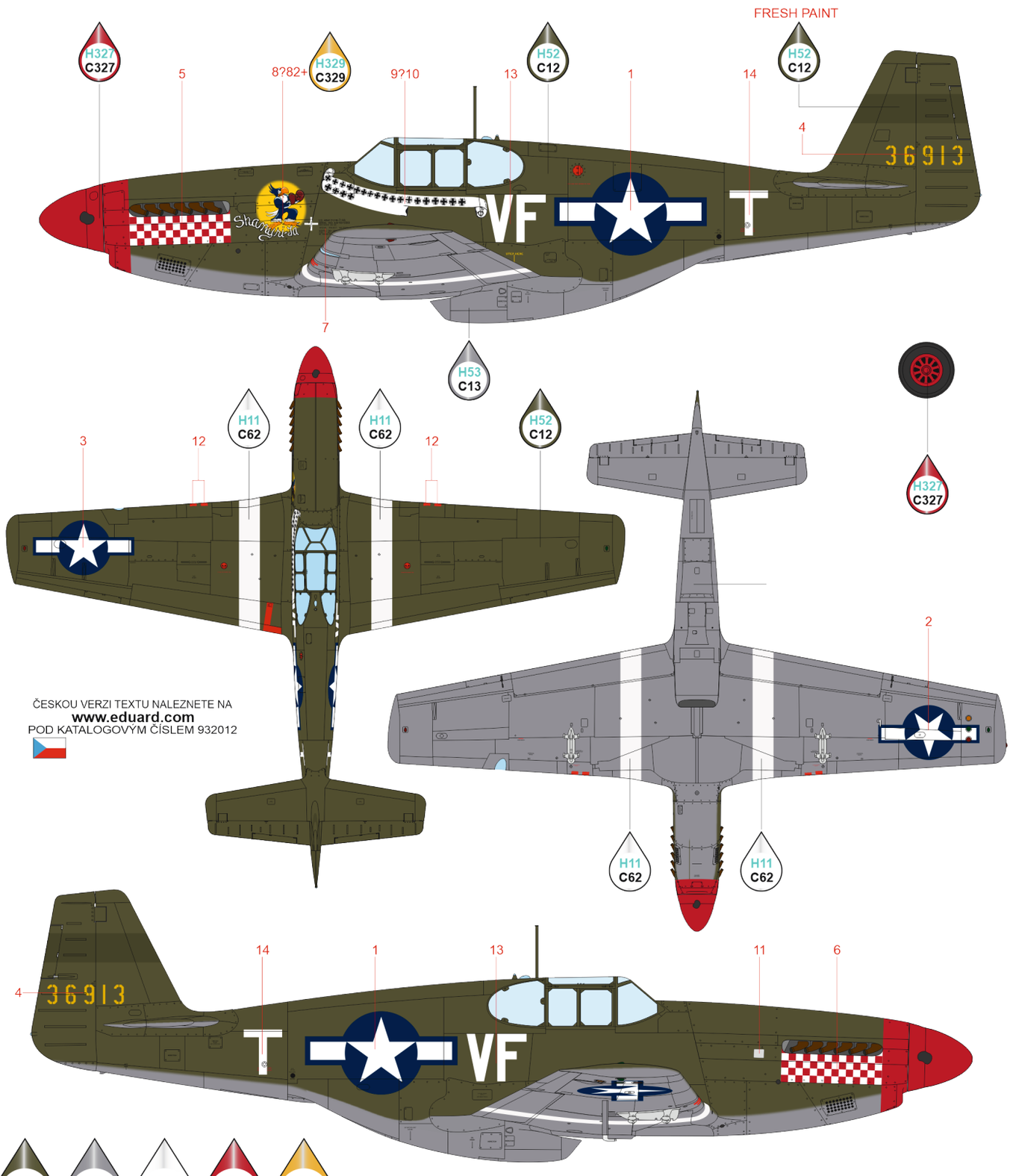

B P-51B-15-NA, 42-106872, Lt. John F. Thornell, 328th FS, 352nd FG, 8th AF, Bodney, the United Kingdom, June 1944

John F. Thornell was assigned to the 328th FS / 352nd FG in April 1943. Flying with the unit, which was equipped with P-47 Thunderbolt aircraft, he scored his first of a total of five aerial victories on January 30, 1944, flying a P-47D. In April, the 352nd FG was re-equipped with P-51B Mustangs, and Thornell named his new aircraft PATTY ANN II. Between May 8 and June 21, he scored nine of his 17.25 aerial victories in it. Thornell's most successful day was May 8, 1944, when he shot down three Bf 109s during an escort mission to Braunschweig, Germany. For this mission, he was awarded the second-highest U.S. military decoration—the Distinguished Service Cross. During an escort flight over Berlin on July 11, 1944, he reached the 300-hour mark of operational flight time; he subsequently ended his combat service and returned home to the United States. His final wartime tally included 17.25 aerial victories and two aircraft destroyed on the ground.

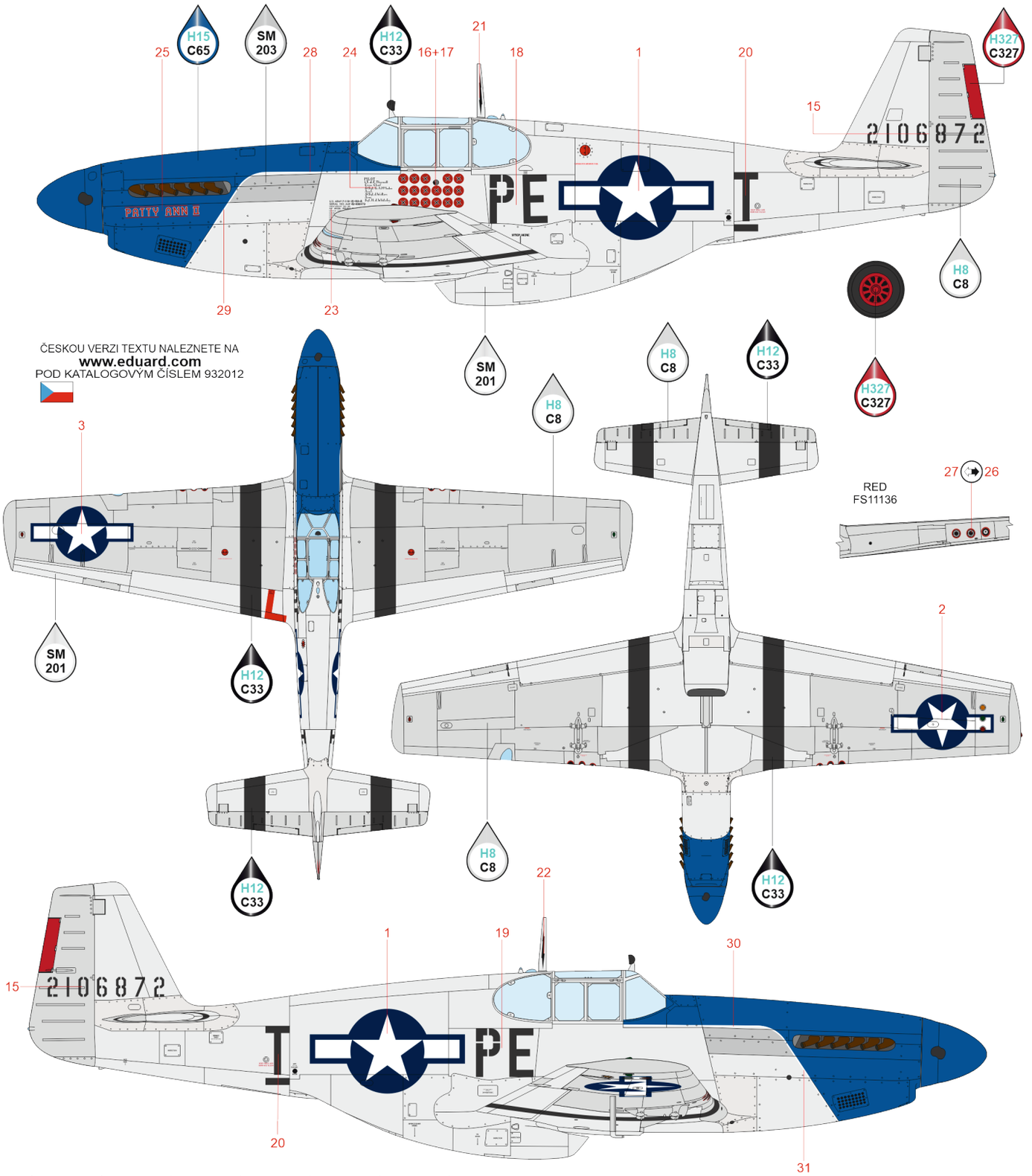

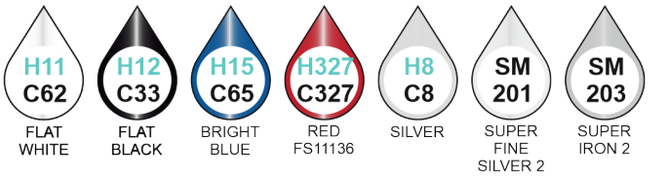

C P51C-1-NT, s/n 42-103309, Lt. William B. Overstreet, 363rd FS, 357th FG, 8th AF, Leiston, the United Kingdom, June 1944

"Bill" Overstreet became particularly famous for his story of chasing a German Bf 109 through the arches of the Eiffel Tower. The dogfight supposedly happened sometime in the spring of 1944, but it is questionable whether the passage through the Eiffel Tower actually took place. Nor is the exact date of the duel known, and there is no mention in German records of such a strange event as a fighter plane crashing into the streets of Paris ... Overstreet was, however, an aggressive and capable pilot, and on September 3, 1944, for example, he took part in an Aphrodite-Anvil top-secret mission in which a remote-controlled four-engine bomber attacked a heavily defended and heavily protected German submarine base hidden in the cliffs of Heligoland. He subsequently flew other secret missions in support of the French Resistance, often landing behind enemy lines. His Berlin Express, with which he was to fly under and through the Eiffel Tower, bore a partial coat of olive drab paint on the upper surfaces, while the sides and undersides were left in a natural metal and aluminum paint.



H12 C33	H11 C62	H327 C327	H329 C329	H330 C361	H8 C8	SM 201	SM 203
FLAT BLACK	FLAT WHITE	RED FS11136	YELLOW FS13538	DARK GREEN	SILVER	SUPER FINE SILVER 2	SUPER IRON 2

D P-51B-15-NA, 43-24857, Capt. Robert M. Barkey, 318th FS, 325th FG, 15th AF, Lesina, Italy, June 1944

Robert Barkey, after his initial training, was assigned to the unit called the "Checkertail Clan" (319th FS, 325th FG) flying P-40s in Africa. After retraining on P-47s in late 1943, he was transferred to Italy with the unit. Barkey's first victory came on February 22, 1944, when he shot down two Bf 109s, both flown by aces from the German elite JG 26. After his unit switched to P-51B Mustangs, Barkey scored his fifth and final victory on June 6, 1944. He retired with the rank of Major in 1961. During World War II, he flew 53 combat sorties and achieved five confirmed victories and one probable victory. Barkey's Mustang number 90 bore his wife Dorothy's name on the left side of the engine cowling.

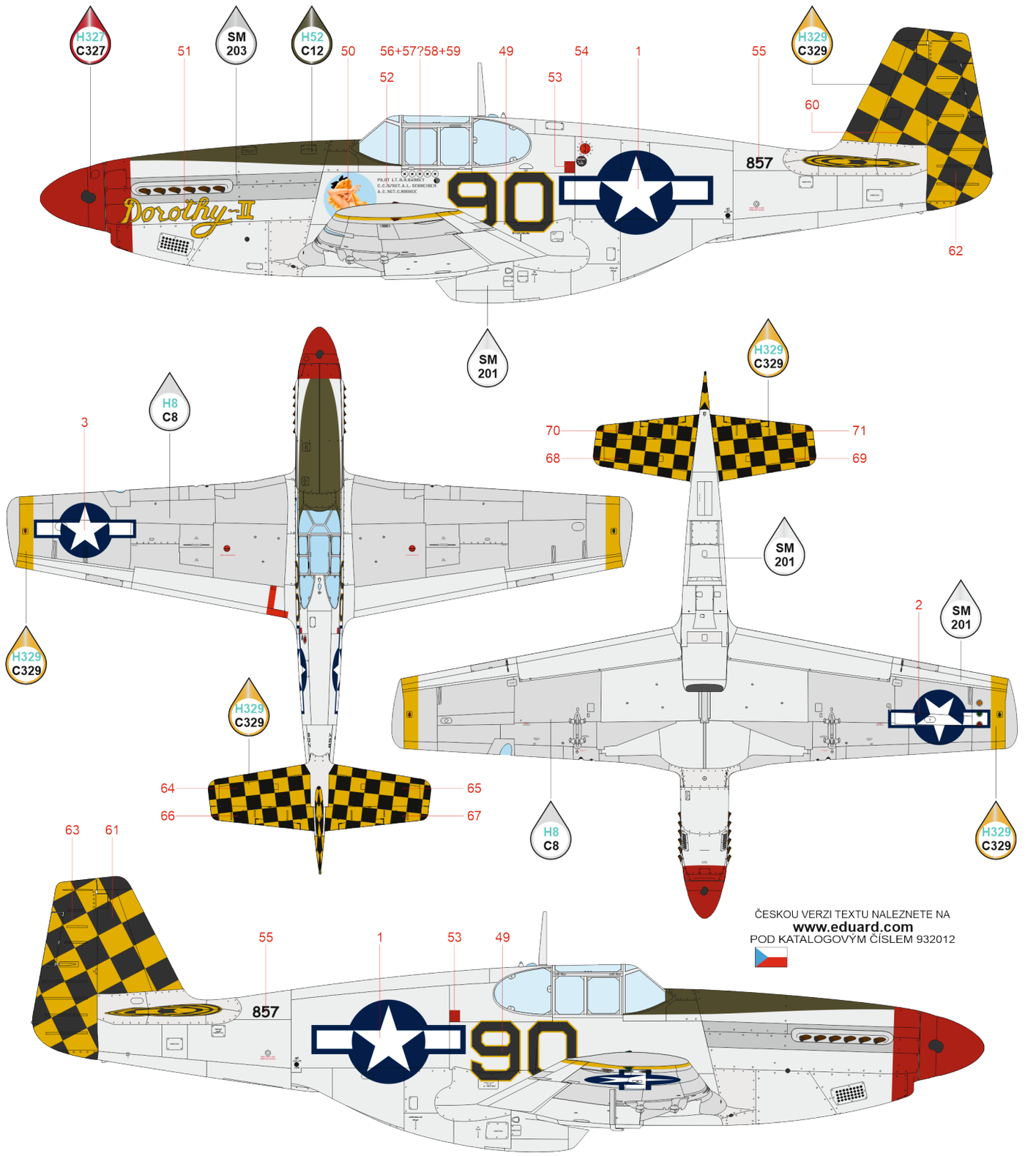

ČESKOU VERZI TEXTU NALEZNETE NA
www.eduard.com
POD KATALOGOVÝM ČÍSLEM 932012

H327 C327	H329 C329	H52 C12	H8 C8	SM 201	SM 203
RED FS11136	YELLOW FS13538	OLIVE DRAB	SILVER	SUPER FINE SILVER 2	SUPER IRON 2

E P-51C-10-NT, s/n 42-103454, Capt. Woodrow Crockett, 100th FS, 322nd FG, 15th AF, Ramitelli, Italy, November 1944

This P-51C originally flew with the 325th Fighter Group, featuring a yellow-and-black checkerboard pattern on the rudder, and was nicknamed "Stonewall." After being transferred to the "Tuskegee Airmen" it received a new paint scheme with the 332nd FG and became Capt. Woodrow Crockett's personal aircraft. He named it "Daisy Mae," after the golden-haired character from a popular comic strip. The aircraft was destroyed on January 21, 1945, near the village of Opatovice in the Czech Republic. The pilot, 2nd Lt. Albert L. Young, was killed; the cause of the crash remains unknown.

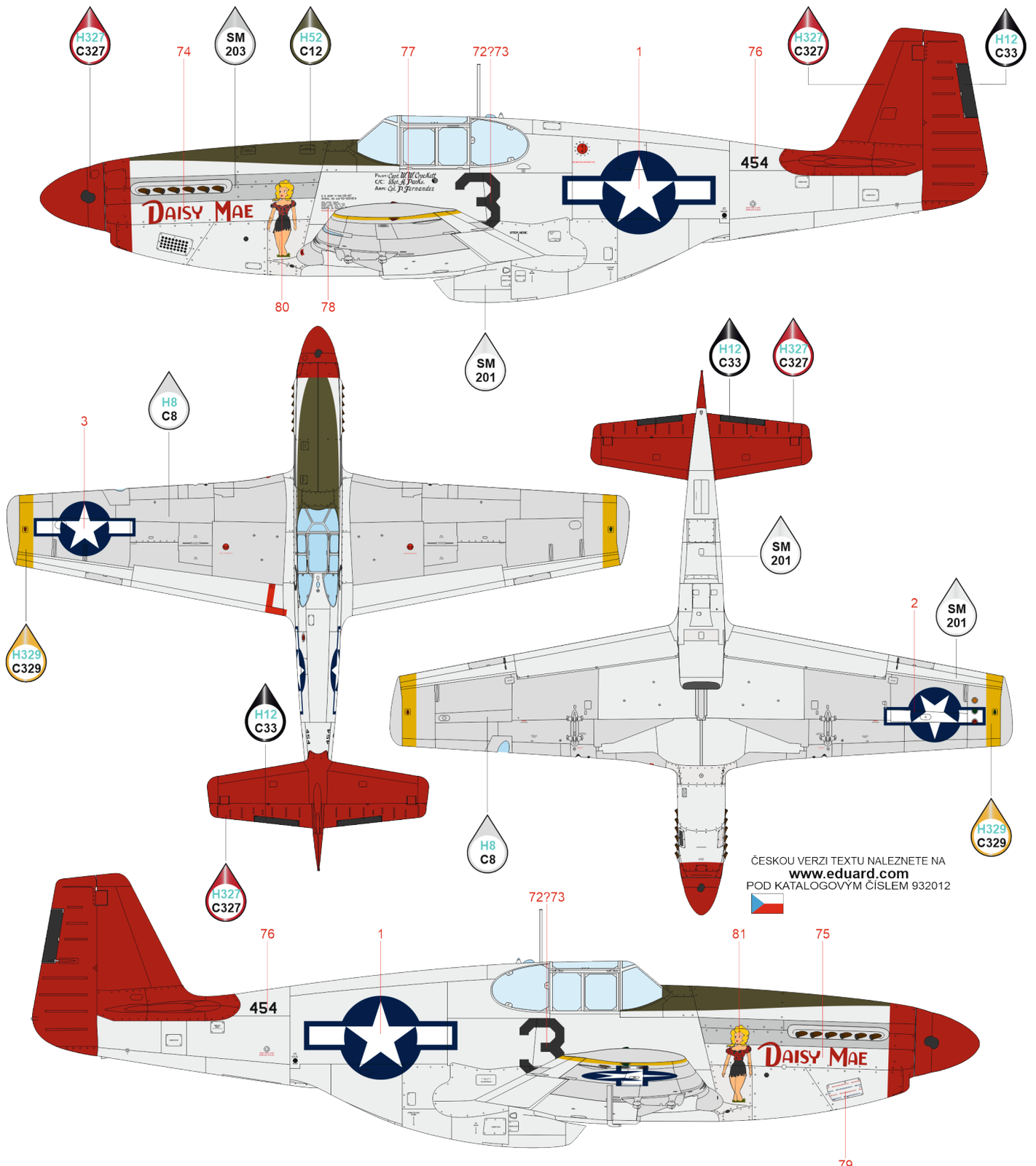

H327 C327	H329 C329	H12 C33	H52 C12	H8 C8	SM 201	SM 203
RED FS11136	YELLOW FS13538	FLAT BLACK	OLIVE DRAB	SILVER	SUPER FINE SILVER 2	SUPER IRON 2

eduard

P-51B/C ALUMINIUM LACQUER PAINTED AREAS

NATURAL METAL FINISH

ALUMINIUM LACQUER

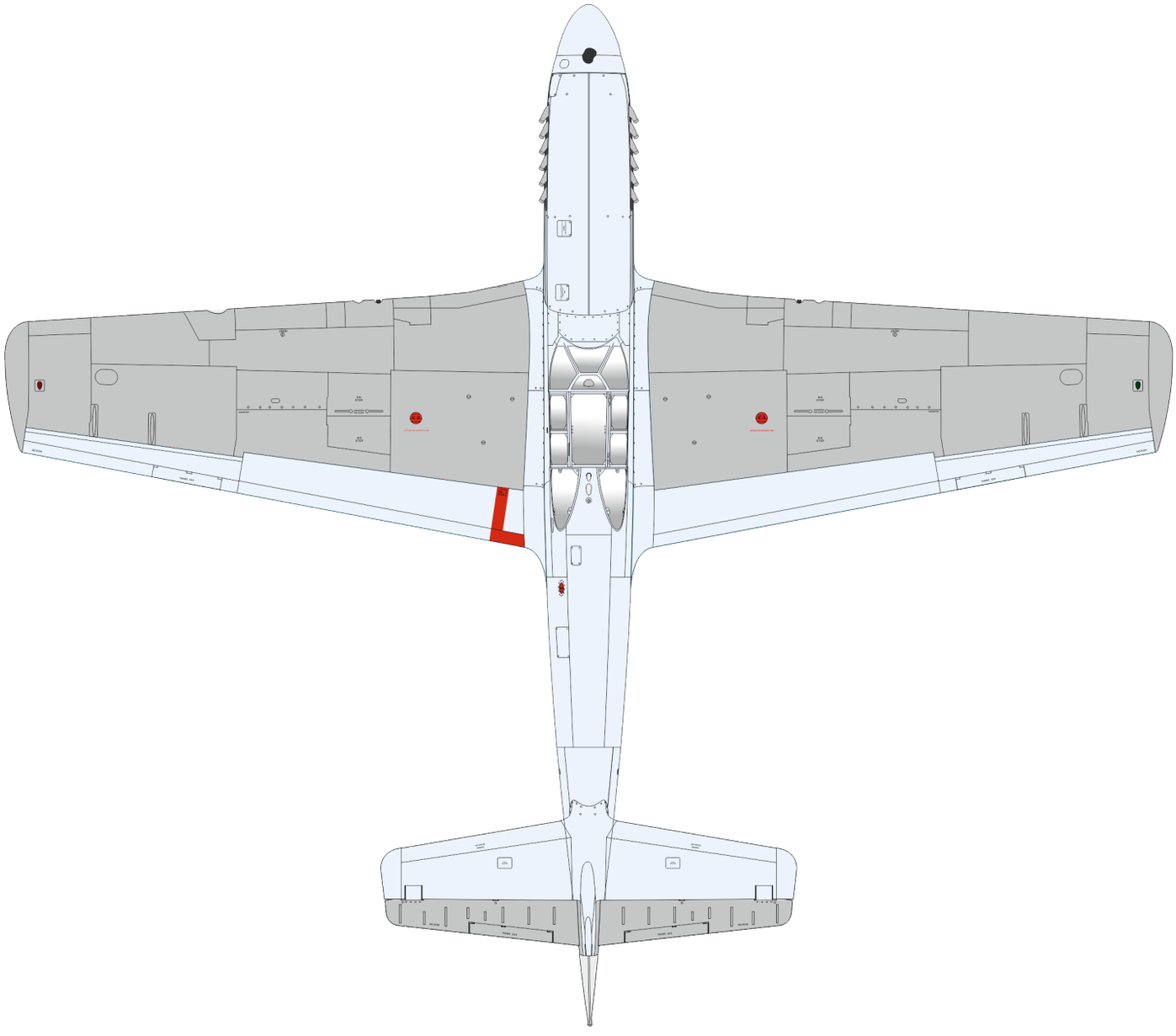

P-51B/C ALUMINIUM LACQUER PAINTED AREAS

NATURAL METAL FINISH

ALUMINIUM LACQUER

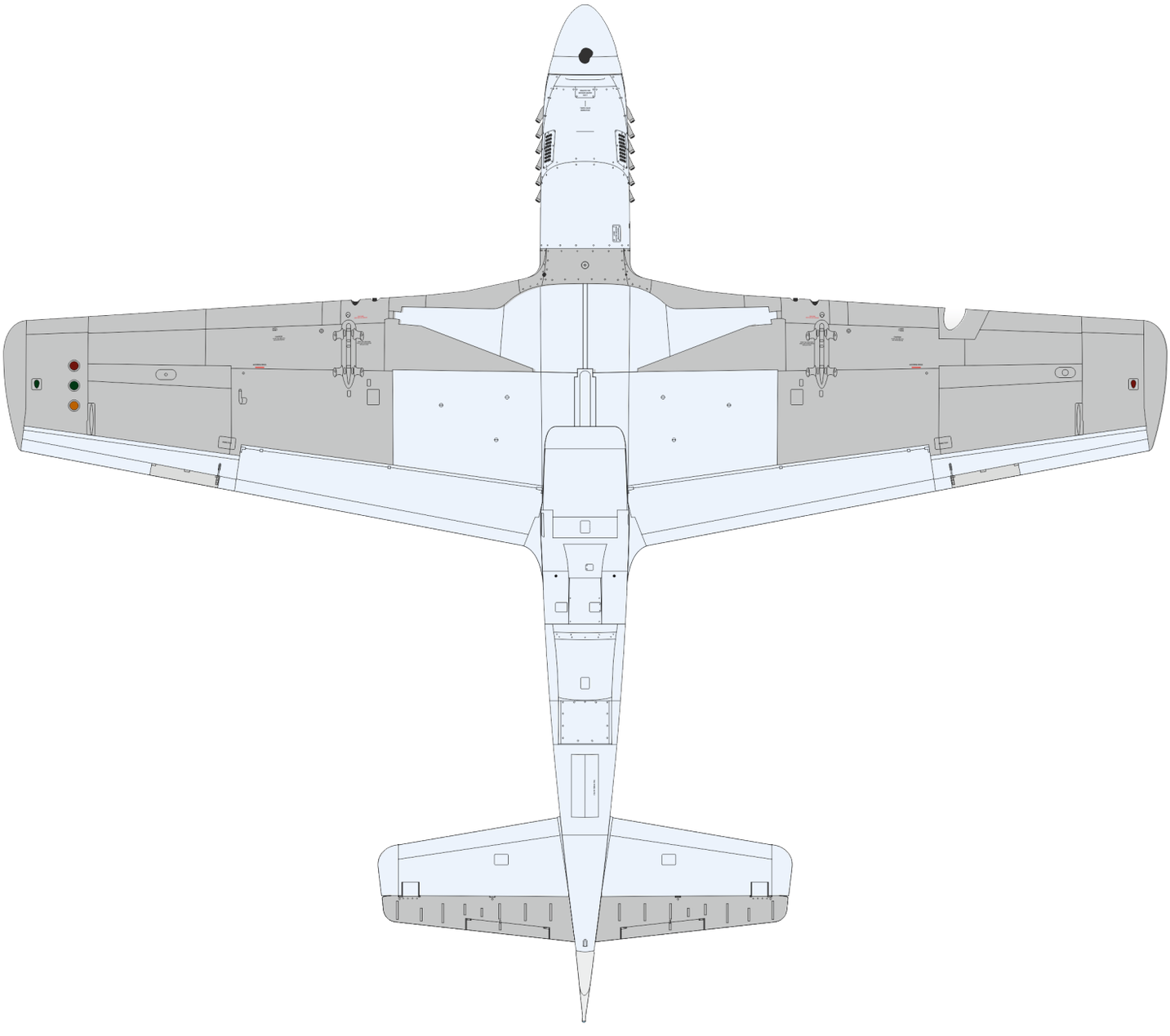

P-51B/C Mustang Birdcage canopy STENCILING POSITIONS

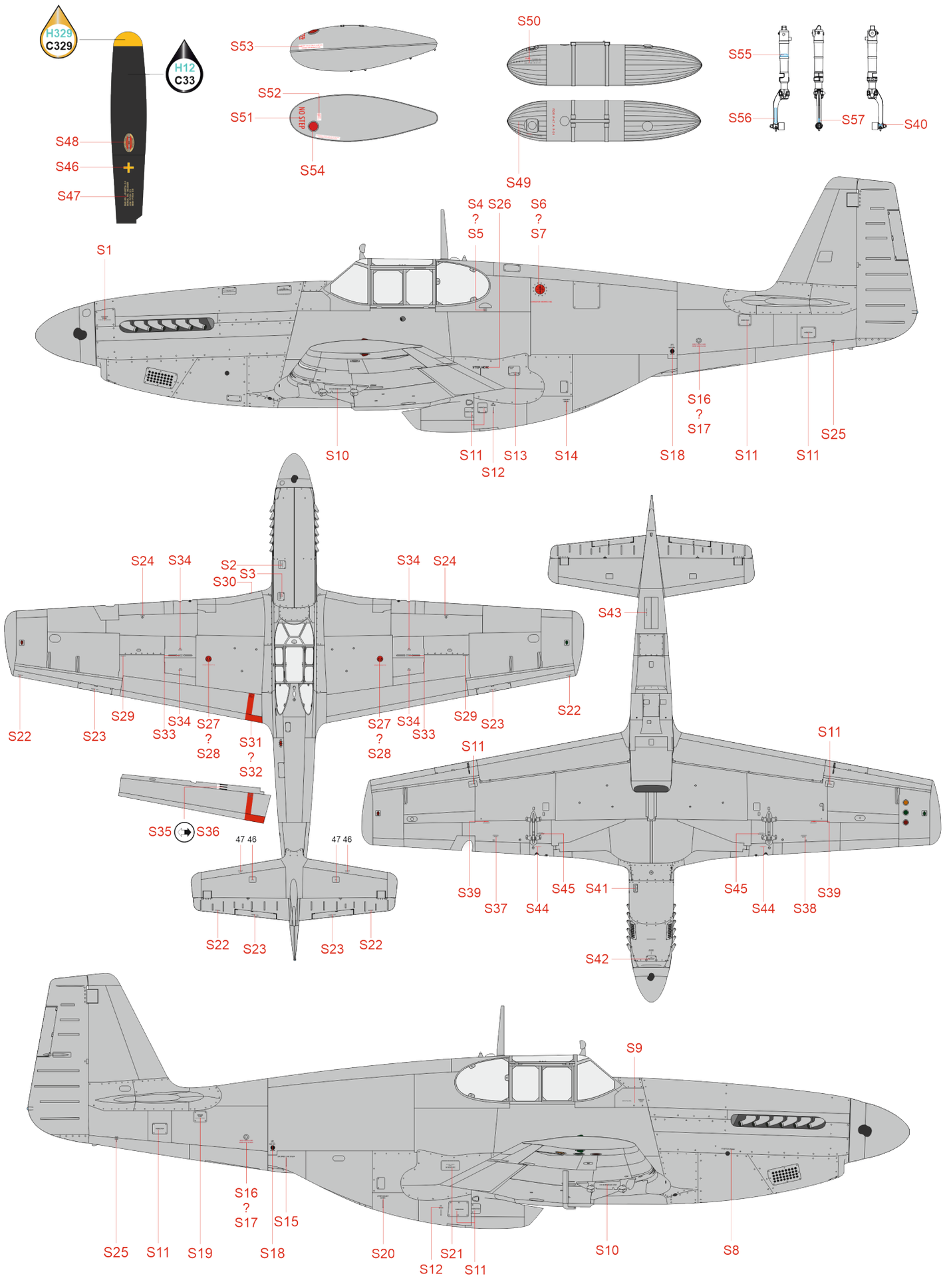

Eduard goodies for P-51B/C Mustang 1/32

33392	P-51B seatbelts STEEL (PE-Set)
634058	P-51B LöôK (Brassin)
632216	P-51B/C gun bays PRINT (Brassin)
3DL32050	P-51B SPACE (3D Decal Set)
JX351	P-51B Birdcage Canopy TFace (Mask)
JX353	P-51B US national insignia (Mask)
JX354	P-51B US national insignia & D-Day stripes (Mask)

634058



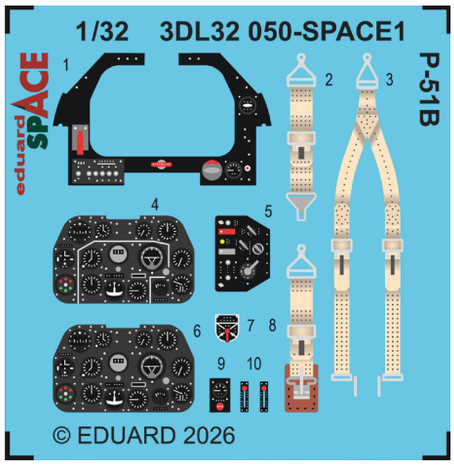

3DL32050

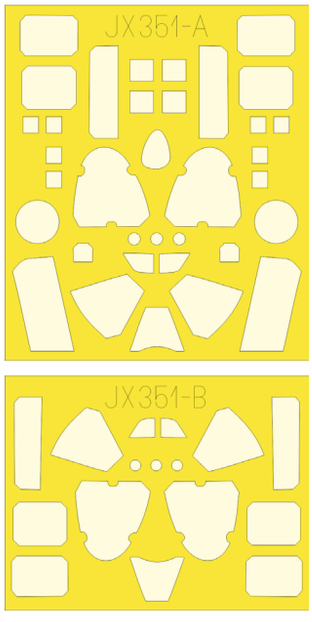

JX351

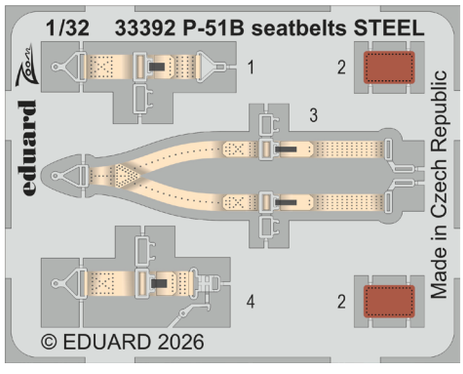

33392

JX353

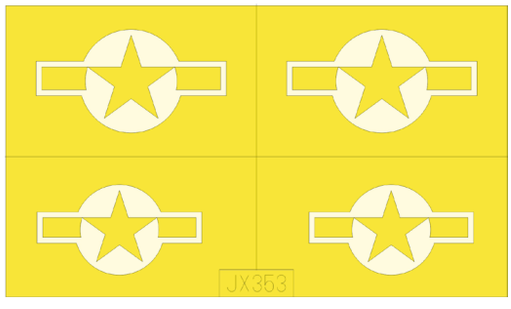

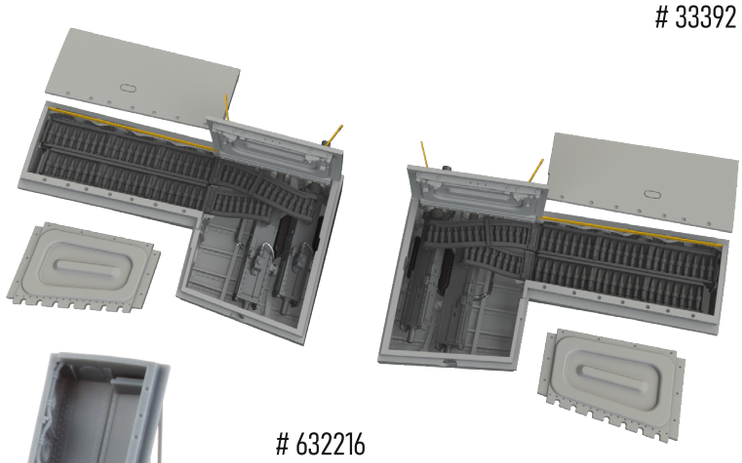

632216

